Service Schematics

NOKIA N96

RM-247

Introduction

IMPORTANT:

This document is intended for use by authorized NOKIA service centers only.

"Service Schematics" was created with focus on customer care.
The purpose of this document is to provide further technical repair information for NOKIA mobile phones on Level 3/4 service activities.
It contains additional information such as e.g. "Component finder".

Saving process time and improving the repair quality is the aim of this document.
It is to be used additionally to the service manual and other training
or service information such as Service Bulletins.

While every endeavour has been made to ensure the accuracy of this document, some errors may exist. If the reader finds any errors, NOKIA shall be notified in writing.

Please send E-Mail to: TrainingAndVendor.Development@nokia.com

Table of Contents

Front page	1
AV connector, Audio DAC	2
AVilma, Betty	3
RapidoYawe, Memories, GPS	4
Nomadik, peripherals	5
WLAN, Bluetooth	6
User Interface	7
RF part	8
Component finder	9

Copyright © NOKIA
This material, including documentation and any related computer programs is protected by copyright, controlled by NOKIA. All rights are reserved. Copying, including reproducing, modifying, storing, adapting or translating any or all of this material requires the prior written consent of NOKIA. This material also contains companyconfidential information, which may not be disclosed to others without the prior written consent of NOKIA.

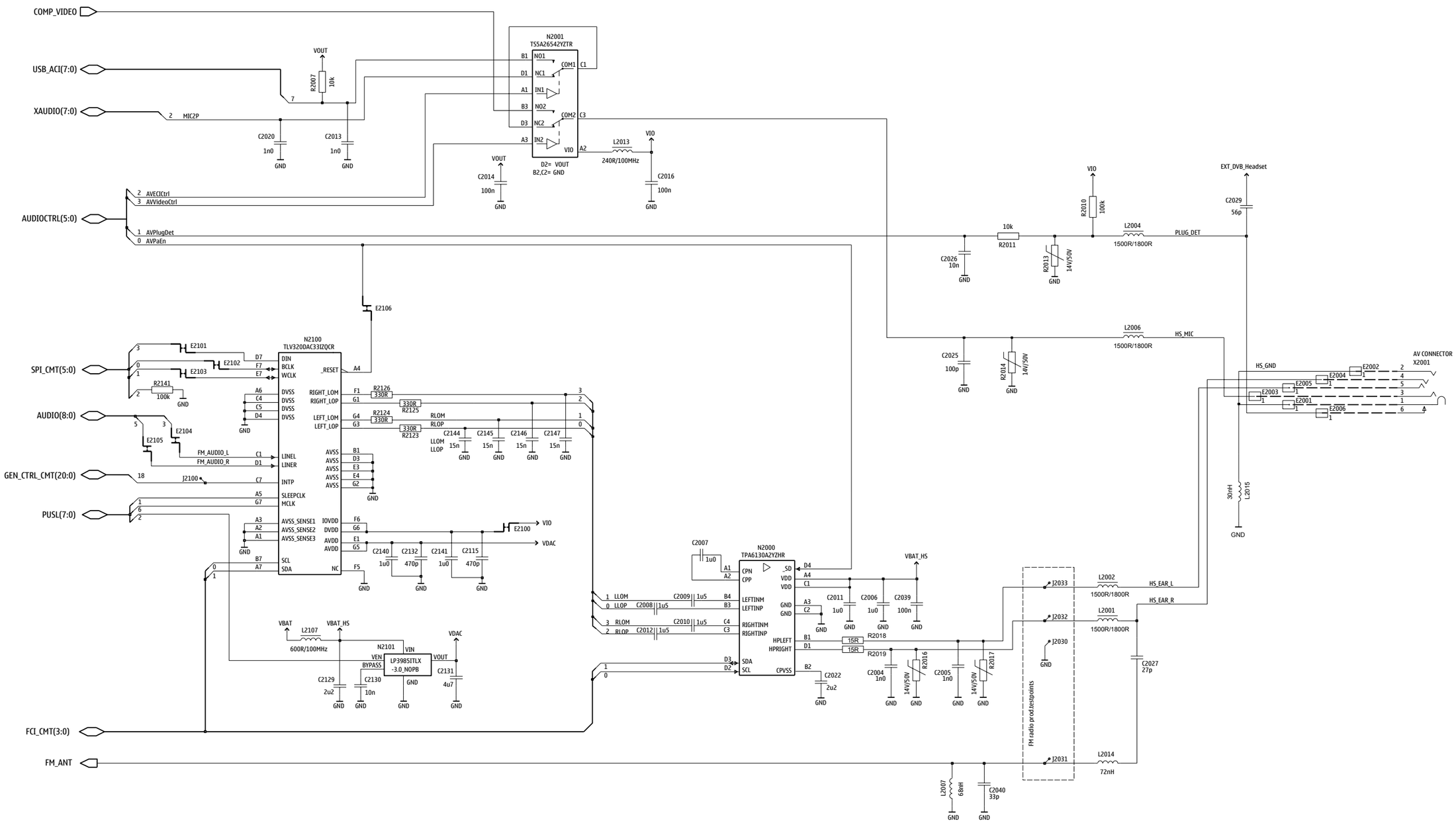
COMP_VIDEO
USB_ACI(7:0)
XAUDIO(7:0)
AUDIOCTRL(5:0)
SPI_CMT(5:0)
AUDIO(8:0)
GEN_CTRL_CMT(20:0)
PUSL(7:0)
FCI_CMT(3:0)
FM_ANT
N2001
TS5A26542YZTR
N2100
TLV320DAC33IZQCR
N2000
TPA6130A2YZHR
N2101
LP3985ITLX -3.0_NOPB
AV CONNECTOR
X2001
EXT_DVB_Headset
PLUG_DET
HS_MIC
HS_GND
HS_EAR_L
HS_EAR_R
FM radio prod.testpoints
VOUT
VIO
VDAC
VBAT
VBAT_HS
GND

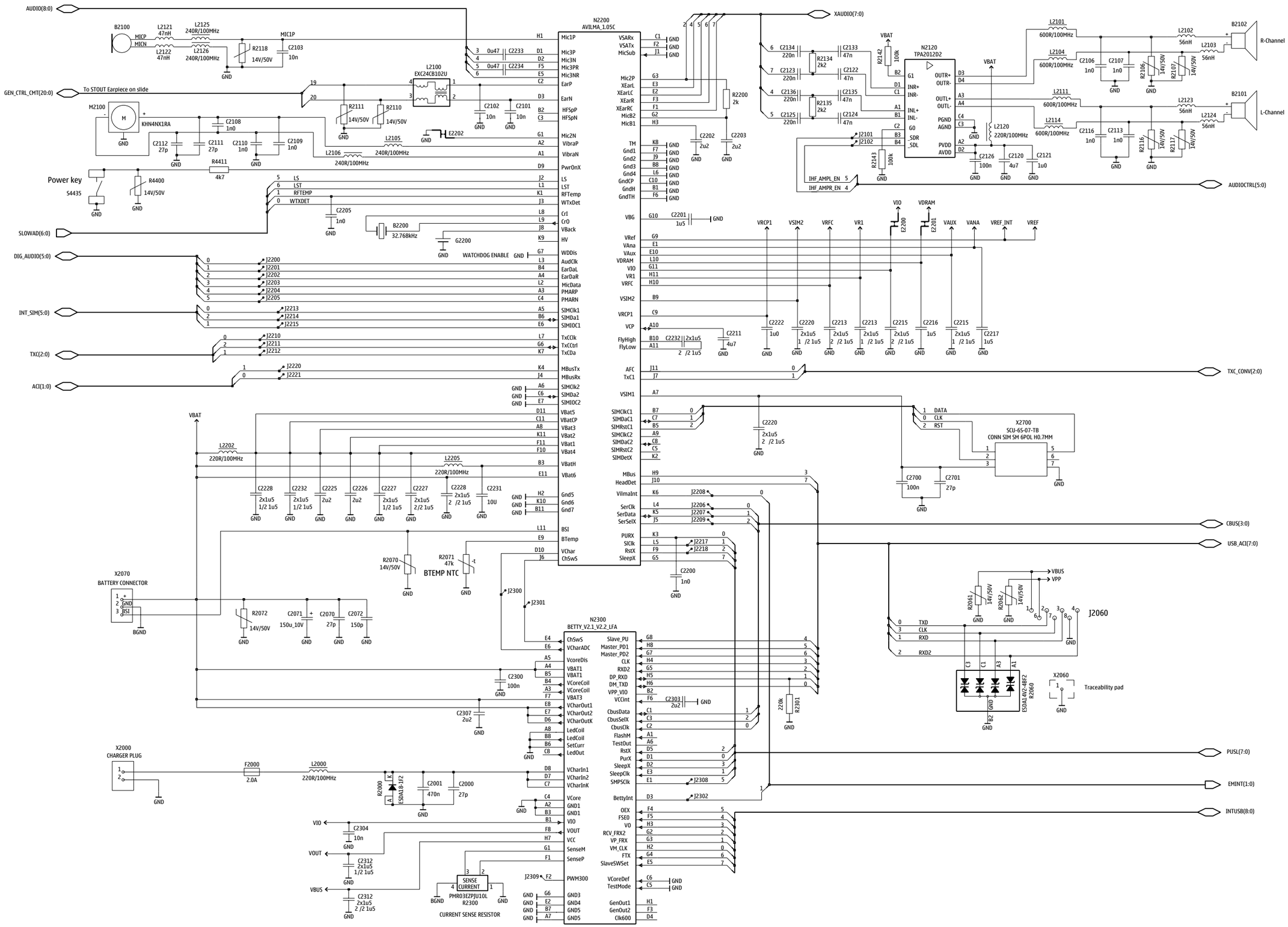

Confidential Copyright © 2008 NOKIA Only for training and service purposes

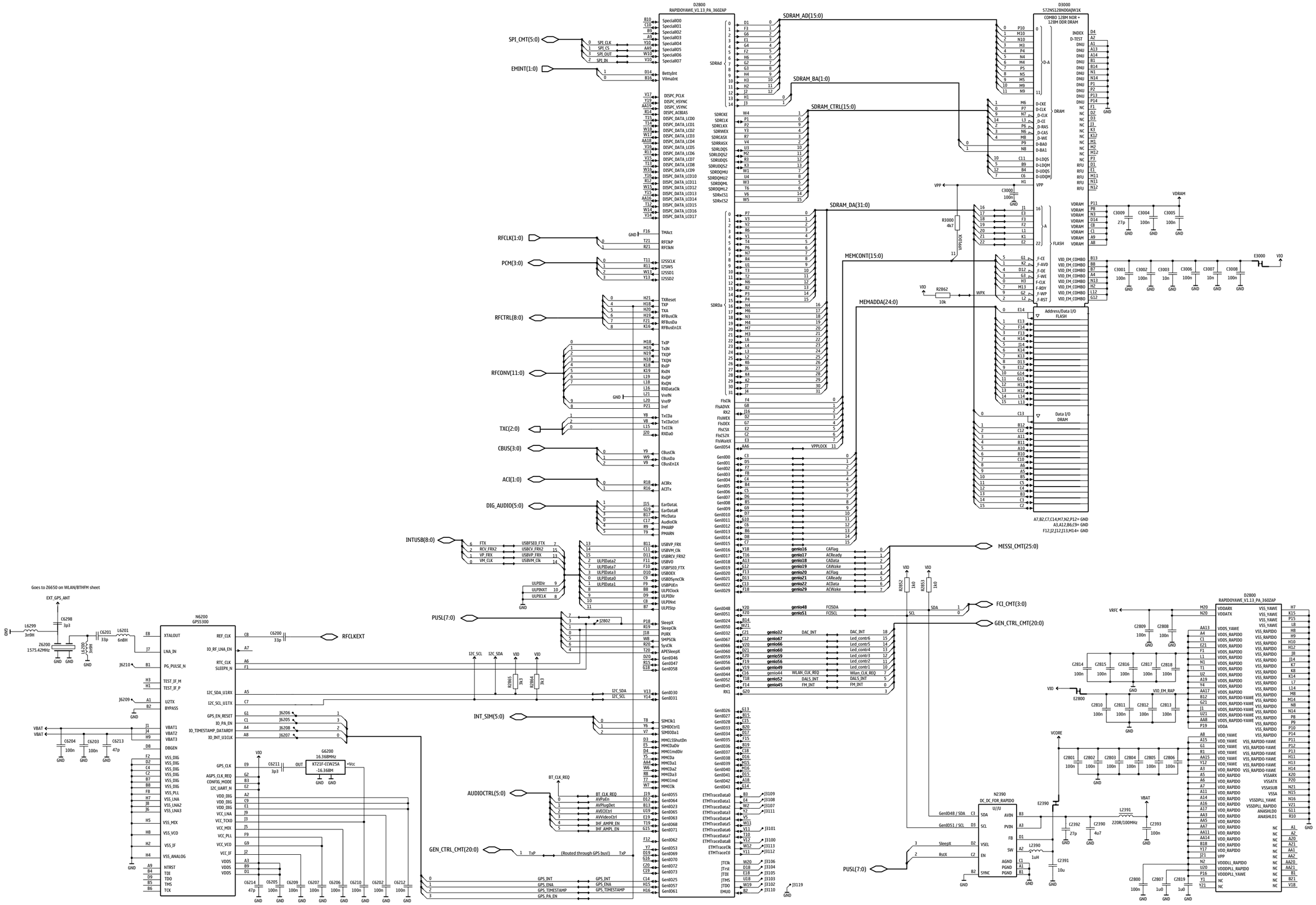

Confidential Copyright © 2008 NOKIA Only for training and service purposes

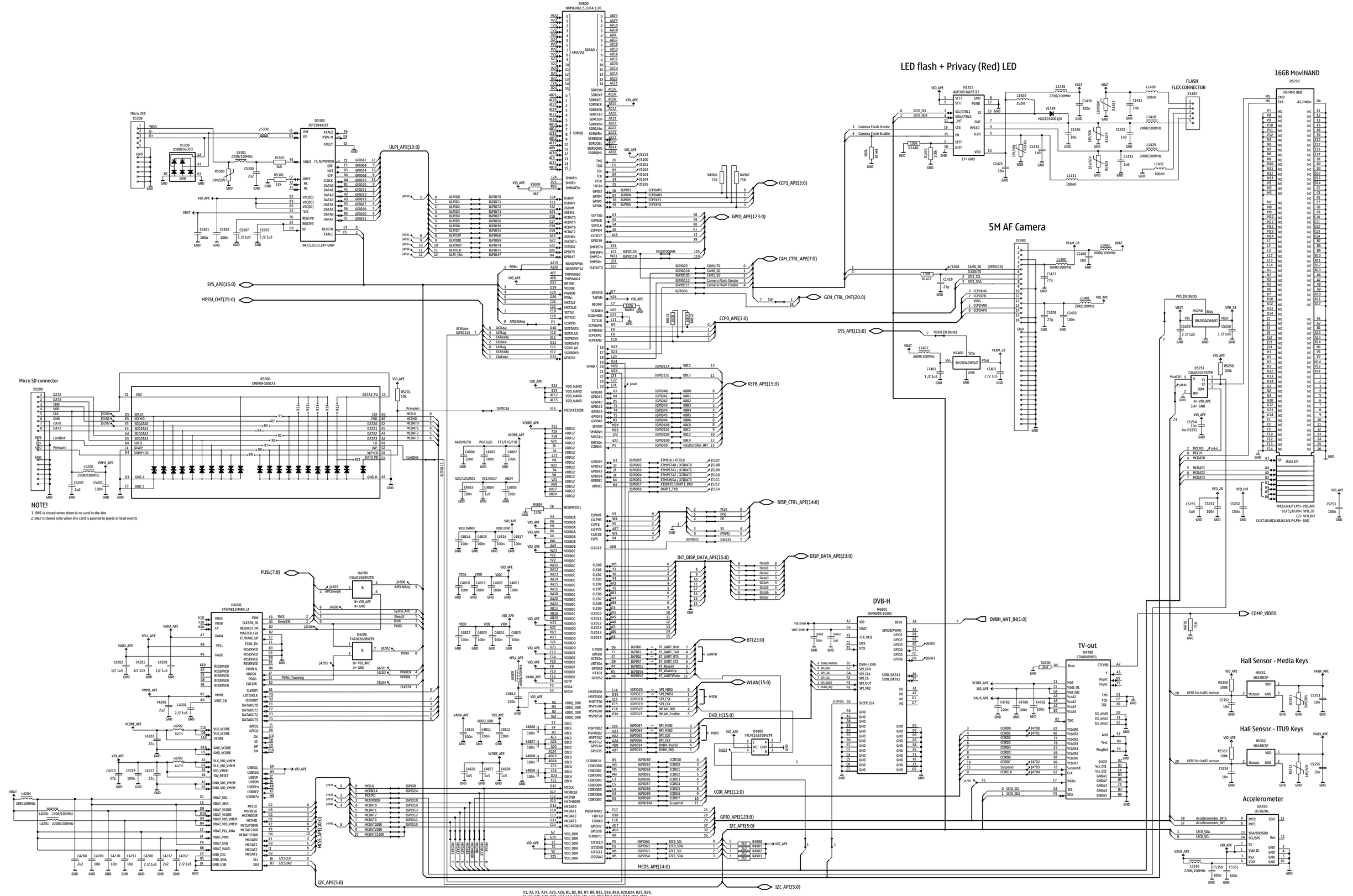

Confidential Copyright © 2008 NOKIA Only for training and service purposes

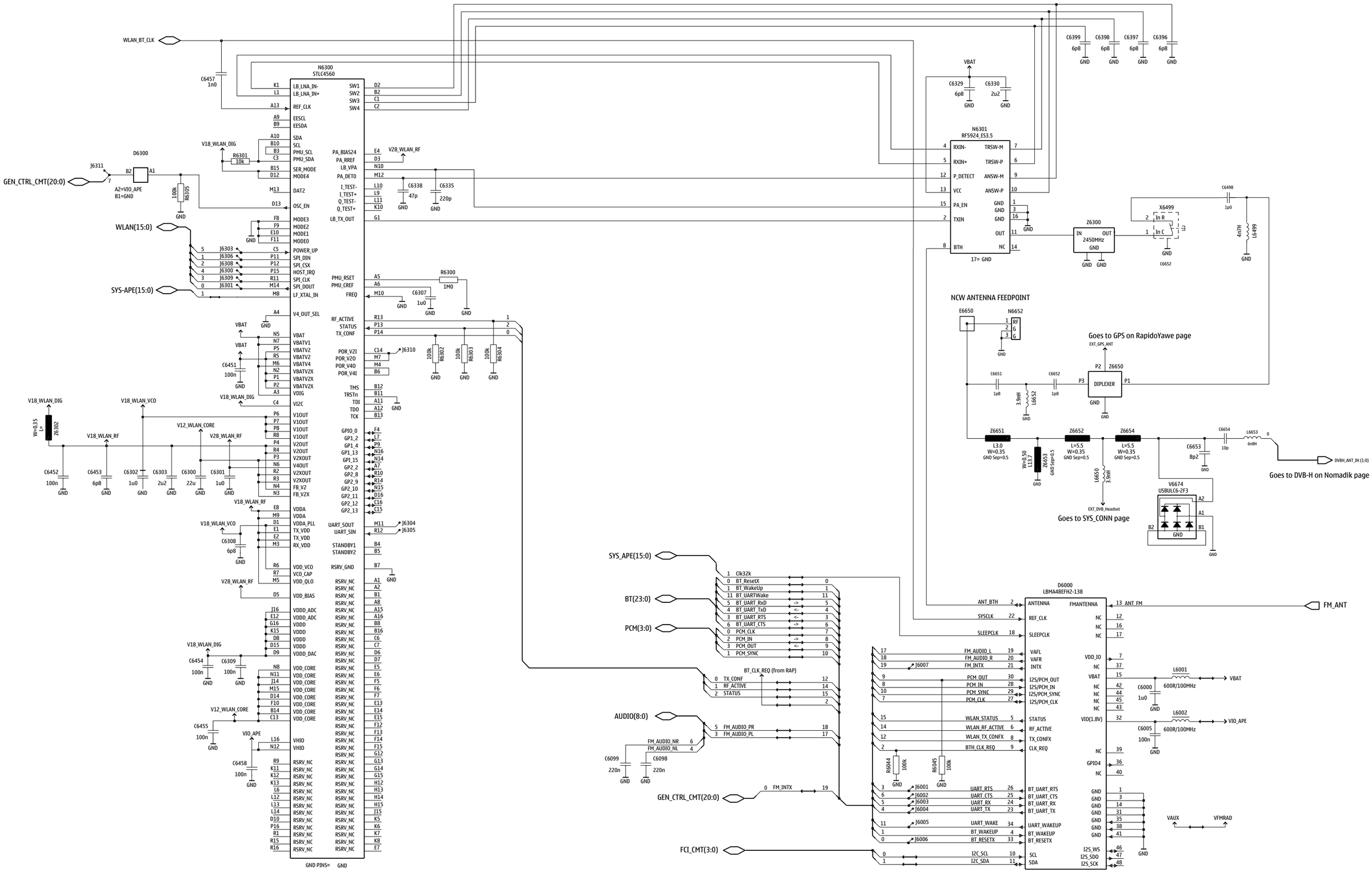

Confidential Copyright © 2008 NOKIA Only for training and service purposes

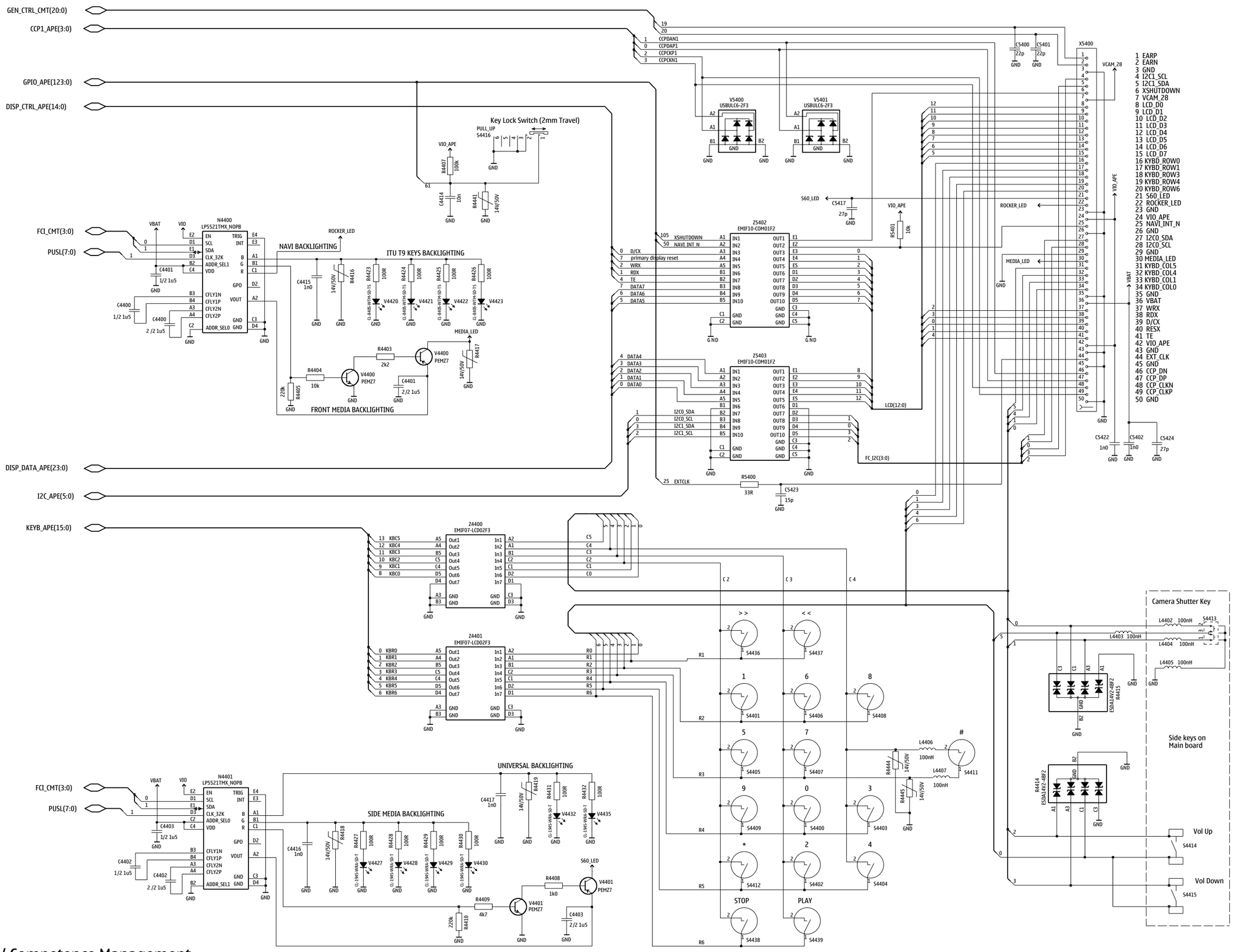

Confidential Copyright © 2008 NOKIA Only for training and service purposes

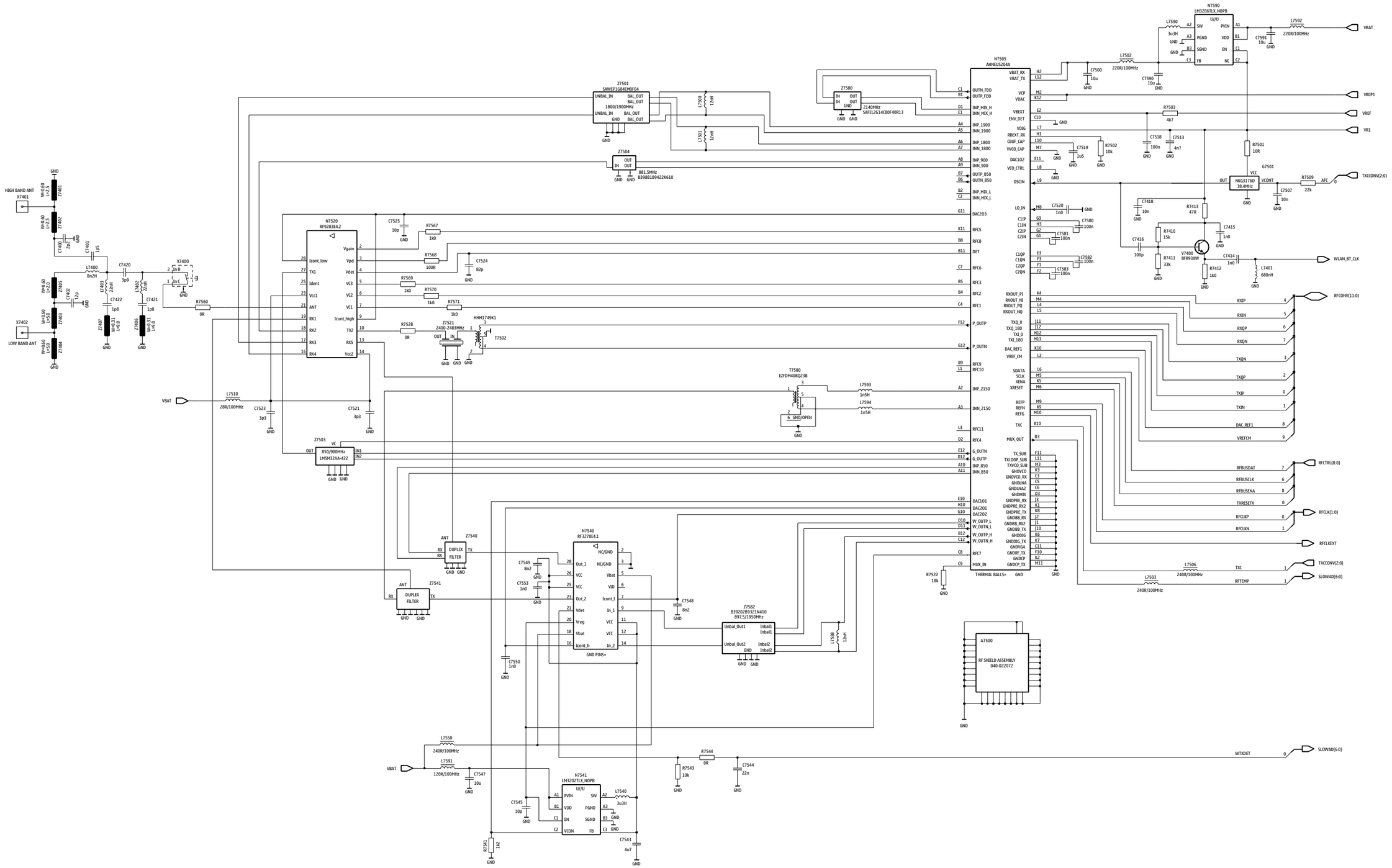

Confidential Copyright © 2008 NOKIA Only for training and service purposes

A		C2200	E7	C4415	C7	C6300	G15	E2005	G19	N4700	G14	R2135	J11	R7502	I7
A6200	C15	C2201	F8	C4416	J17	C6301	G17	E2006	E19	N5250	F11	R2141	C14	R7503	H7
A7500	F6	C2202	E7	C4417	J17	C6302	H16	E6650	B20	N5350	F10	R2142	J13	R7509	I6
B		C2203	D8	C4700	G15	C6303	H15	F		N5351	B4	R2143	J13	R7522	H6
B2200	E7	C2205	D7	C4701	G15	C6307	H17	F2000	F2	N5352	B12	R2200	D8	R7528	F5
C		C2211	F9	C4702	G14	C6308	G17	G		N6200	C17	R2300	B12	R7541	C7
C1400	E17	C2213	F8	C4800	G12	C6309	H17	G2200	F10	N6300	H16	R2301	C9	R7543	C6
C1401	C14	C2215	F8	C4801	G12	C6329	G16	G6200	B17	N6301	G16	R2852	G7	R7544	C7
C1425	J15	C2216	E7	C4802	H14	C6330	F16	G7501	I5	N6601	C17	R2853	H7	R7560	D7
C1426	J14	C2217	D8	C4803	J13	C6335	G16	L		N7505	I6	R2862	H8	R7567	G7
C1427	E17	C2220	F9	C4804	J12	C6338	F16	L1400	D17	N7520	F6	R2864	F9	R7568	G7
C1428	E16	C2222	E8	C4805	J11	C6396	F17	L1401	D16	N7540	C6	R2865	F9	R7569	F7
C1429	H15	C2225	E9	C4806	G14	C6397	F16	L1402	D17	N7541	C7	R3000	J10	R7570	F7
C1430	K16	C2226	F8	C4807	G11	C6398	G17	L1425	J15	L6653	C18	R4400	H20	R7571	E7
C1431	H14	C2227	F8	C4808	J11	C6399	G17	L1426	J16	L7400	C3	R4403	C7	S	
C1432	H14	C2228	F8	C4809	I14	C6451	G16	L1427	B14	L7401	J8	R4404	B7	S4413	J5
C1433	I14	C2231	D8	C4810	G14	C6452	H16	L1428	H15	L7402	C4	R4405	C7	S4414	K17
C1434	I14	C2232	F9	C4811	G13	C6453	G17	L1429	I15	L7403	C4	R4407	C19	S4415	K16
C1435	E16	C2233	E9	C4812	G12	C6454	I17	L1430	H15	L7500	H7	R4408	J16	S4416	C20
C1436	E17	C2234	E9	C4813	G13	C6455	I17	L1431	I15	L7501	H6	R4409	J16	S4435	H20
C2000	C4	C2300	D8	C4814	H14	C6457	H17	L1432	H15	L7502	H5	R4410	J17	T	
C2001	C4	C2303	C9	C4815	H11	C6458	I18	L2000	F2	L7503	H7	R4411	H20	T7502	F5
C2004	F17	C2304	D8	C4816	J12	C6498	C18	L2001	G18	L7506	I5	R4414	K16	T7580	G7
C2005	F17	C2307	C8	C4817	G11	C6602	D16	L2002	G19	L7510	E5	R4415	J5	V	
C2006	C13	C2312	C8	C4818	G12	C6603	B18	L2004	D19	L7540	D7	R4416	C7	V1429	J15
C2007	D13	C2390	H7	C4819	G11	C6651	B19	L2006	G20	L7550	C7	R4417	B7	V4400	B7
C2008	C13	C2391	H8	C4820	H11	C6652	B19	L2007	G17	L7588	H6	R4418	J17	V4401	J16
C2009	C13	C2392	H7	C4821	J11	C6653	C19	L2013	D12	L7590	G5	R4419	J18	V4420	H6
C2010	C13	C2393	G7	C4822	J12	C6654	C19	L2014	G18	L7591	C7	R4423	D7	V4421	E6
C2011	D13	C2700	J14	C4823	J13	C7400	B2	L2015	E17	L7592	G6	R4424	D7	V4422	E3
C2012	C13	C2701	I14	C4824	H14	C7401	B3	L2100	C12	L7593	H7	R4425	D7	V4423	H3
C2013	C13	C2800	H10	C4825	H14	C7402	C2	L2101	E4	L7594	H7	R4426	D7	V4427	B20
C2014	C12	C2801	I9	C4826	J13	C7414	J8	L2102	F4	M		R4427	J18	V4428	E20
C2016	D12	C2802	F8	C4827	F11	C7415	I8	L2103	F4	M2100	D15	R4428	J18	V4429	G20
C2020	C12	C2803	F10	C4828	I14	C7416	J7	L2104	E4	N		R4429	J17	V4430	J20
C2022	C13	C2804	F9	C5200	E9	C7418	I7	L2105	D9	N1400	B14	R4430	J17	V4432	G19
C2025	G20	C2805	I10	C5201	E10	C7420	C4	L2106	D9	N1425	J14	R4431	J18	V4435	E19
C2026	D18	C2806	I9	C5250	F11	C7421	C3	L2107	B15	N2000	C13	R4432	J18	V5300	H2
C2027	G17	C2807	G8	C5251	F11	C7422	B4	L2111	J16	N2001	C12	R4441	C19	V5400	D11
C2029	D19	C2808	G8	C5252	E11	C7500	I6	L2114	J16	N2100	C15	R4444	H2	V5401	D11
C2039	D13	C2809	H8	C5253	D11	C7507	H6	L2120	J11	N2101	B15	R4445	H2	V6674	C19
C2040	F18	C2810	H10	C5254	F11	C7513	I6	L2121	E3	N2120	J12	R4700	H14	V7400	I7
C2070	B13	C2811	F9	C5255	F11	C7518	H7	L2122	E3	N2200	E8	R4701	H14	X	
C2071	B5	C2812	G10	C5300	F4	C7519	I7	L2123	I16	N7590	G5	R4801	G14	X1400	F16
C2072	B13	C2813	F9	C5301	K13	C7520	I7	L2124	I16	R		R4802	H14	X1401	H16
C2101	D12	C2814	I8	C5302	J14	C7521	E7	L2125	E3	R1427	H15	R4803	H14	X2060	J11
C2102	D12	C2815	H8	C5307	J13	C7523	E5	L2126	E3	R1428	H14	R4804	G14	X2070	B13
C2103	E4	C2816	G10	C5350	F11	C7524	G7	L2202	F7	R1429	I14	R4900	F14	X2700	I12
C2106	F4	C2817	I9	C5351	E11	C7525	F7	L2205	D9	R1430	I14	R4901	F14	X5200	C10
C2107	F4	C2818	G8	C5352	B3	C7543	D6	L2390	H7	R1432	H14	R4902	F15	X5300	H1
C2108	D9	C2819	G8	C5353	B3	C7544	C6	L2391	G7	R1444	I15	R4903	F14	X5400	C10
C2109	D9	C3000	J10	C5354	B12	C7545	C6	L4200	F13	R2000	C4	R4906	G14	X6499	C19
C2110	D9	C3001	I10	C5355	C12	C7547	C7	L4201	E12	R2007	C13	R4907	F14	X7400	D4
C2111	D16	C3002	I9	C5400	D10	C7548	C6	L4202	E14	R2010	D19	R5000	J13	X7401	C2
C2112	E16	C3003	I10	C5401	D10	C7549	D6	L4203	F11	R2011	D18	R5200	B9	X7402	D2
C2113	I16	C3004	J9	C5402	C10	C7550	C7	L4204	F11	R2013	D19	R5201	B8	Z	
C2115	C14	C3005	J10	C5417	B10	C7553	D6	L4402	J5	R2014	G20	R5250	E11	Z4400	G7
C2116	I16	C3006	I9	C5422	B10	C7580	I7	L4403	J5	R2016	F17	R5300	F4	Z4401	F7
C2120	J12	C3007	J9	C5423	D11	C7581	I7	L4404	J5	R2017	F17	R5301	J13	Z5300	H2
C2121	J12	C3008	J9	C5424	C10	C7582	J7	L4405	K5	R2018	D14	R5302	J12	Z5402	B11
C2122	J12	C3009	I9	C6000	E17	C7583	I7	L4406	H2	R2019	D14	R5350	B3	Z5403	B11
C2123	J11	C4200	E13	C6005	F15	C7590	G5	L4407	H2	R2060	F9	R5351	B3	Z6200	B17
C2124	J12	C4201	E13	C6098	E16	C7591	G6	L4800	G13	R2061	F9	R5352	B12	Z6300	G17
C2125	J11	C4202	E12	C6099	E16	D		L5200	E10	R2062	J6	R5353	C12	Z6650	B18
C2126	J12	C4206	F13	C6200	C16	D2800	G9	L5301	F4	R2070	C11	R5400	D11	Z7501	G7
C2129	B15	C4207	E13	C6201	C17	D3000	J9	L5350	F10	R2071	B14	R5401	B10	Z7503	G6
C2130	B15	C4208	F12	C6202	C17	D4200	F14	L6001	E17	R2072	B14	R6044	F17	Z7504	H6
C2131	C15	C4209	E14	C6203	C17	D4800	H12	L6002	E15	R2106	F4	R6045	E15	Z7521	F5
C2132	C15	C4210	E13	C6204	D17	D4900	F15	L6200	B17	R2107	F4	R6300	G17	Z7540	D5
C2133	K12	C4211	E12	C6205	D16	D5250	E13	L6201	C17	R2110	D11	R6301	H17	Z7541	D6
C2134	K11	C4212	F12	C6206	C17	D5251	E11	L6299	B18	R2111	D11	R6302	I16	Z7580	H7
C2135	J12	C4213	E11	C6207	B17	D5300	J13	L6499	C18	R2116	I16	R6303	I16	Z7582	H5
C2136	J11	C4214	F12	C6209	D17	D6000	E16	L6650	D19	R2117	I16	R6304	I15		
C2140	C15	C4215	E12	C6210	D17	D6300	I17	L6652	B19	R2118	E4	R6305	I17		
C2141	C15	C4400	C7	C6211	C16	E		N2300	C8	R2123	C14	R7410	J7		
C2144	C13	C4401	C7	C6212	D16	E2001	E18	N2390	H7	R2124	C14	R7411	J7		
C2145	C13	C4402	J17	C6213	B16	E2002	E20	N4200	F12	R2125	C15	R7412	I8		
C2146	B15	C4403	J17	C6214	C16	E2003	G20	N4400	C7	R2126	C15	R7413	I7		
C2147	C15	C4414	C19	C6298	B18	E2004	G18	N4401	J17	R2134	J11	R7501	I6		

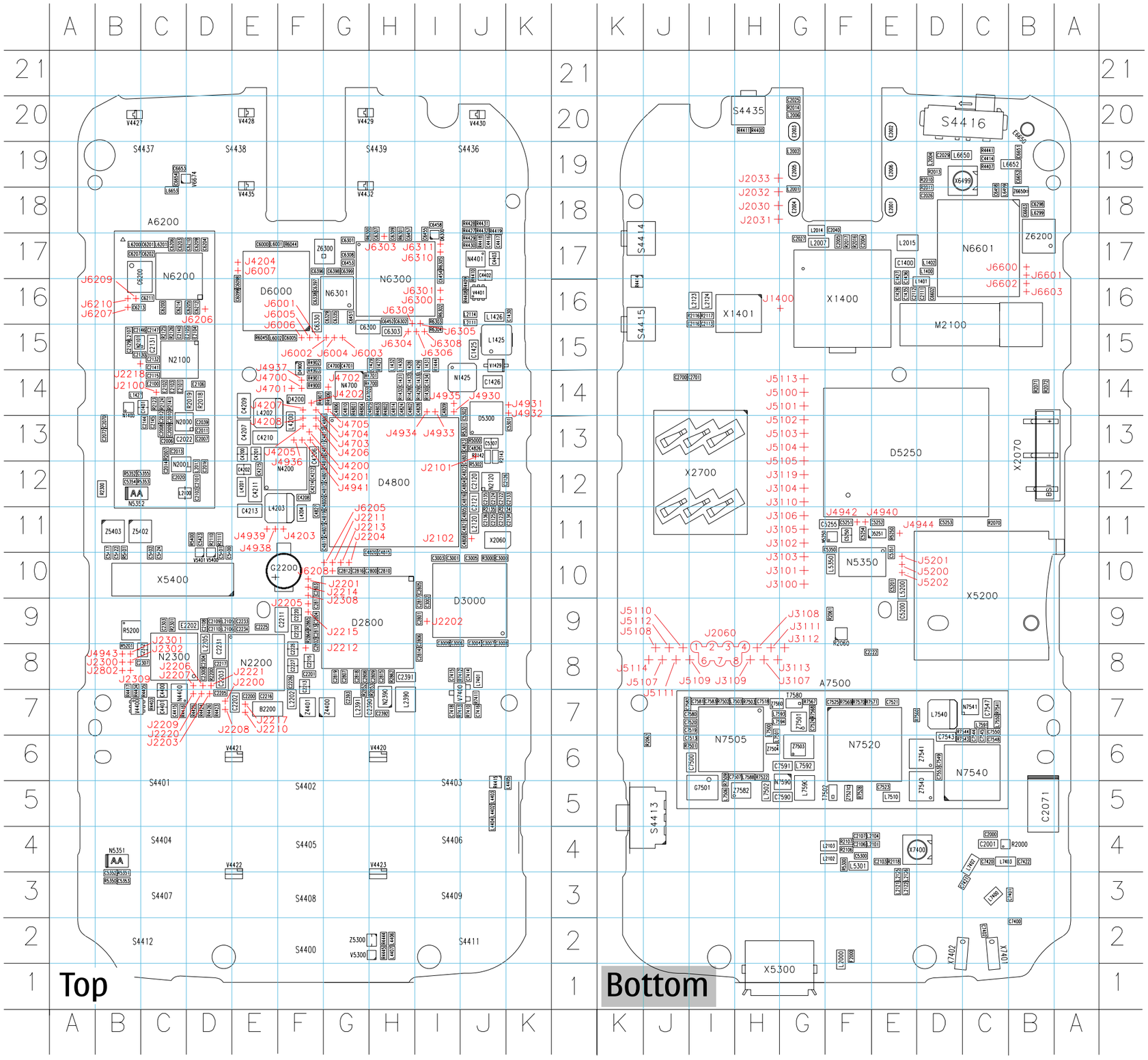

Confidential Copyright © 2008 NOKIA Only for training and service purposes