MAIN BOARD TOP LEVEL

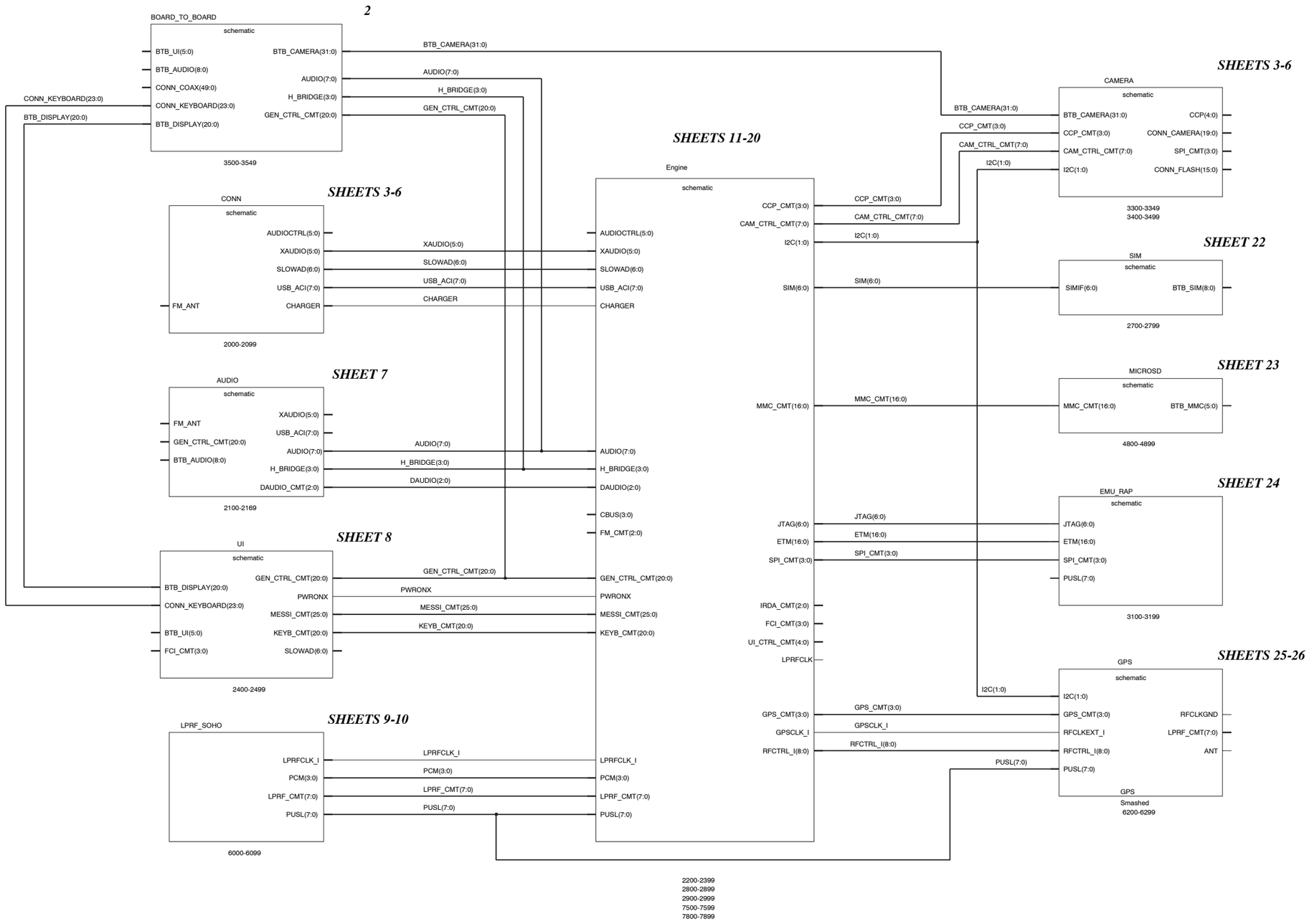

B2B CONNECTOR

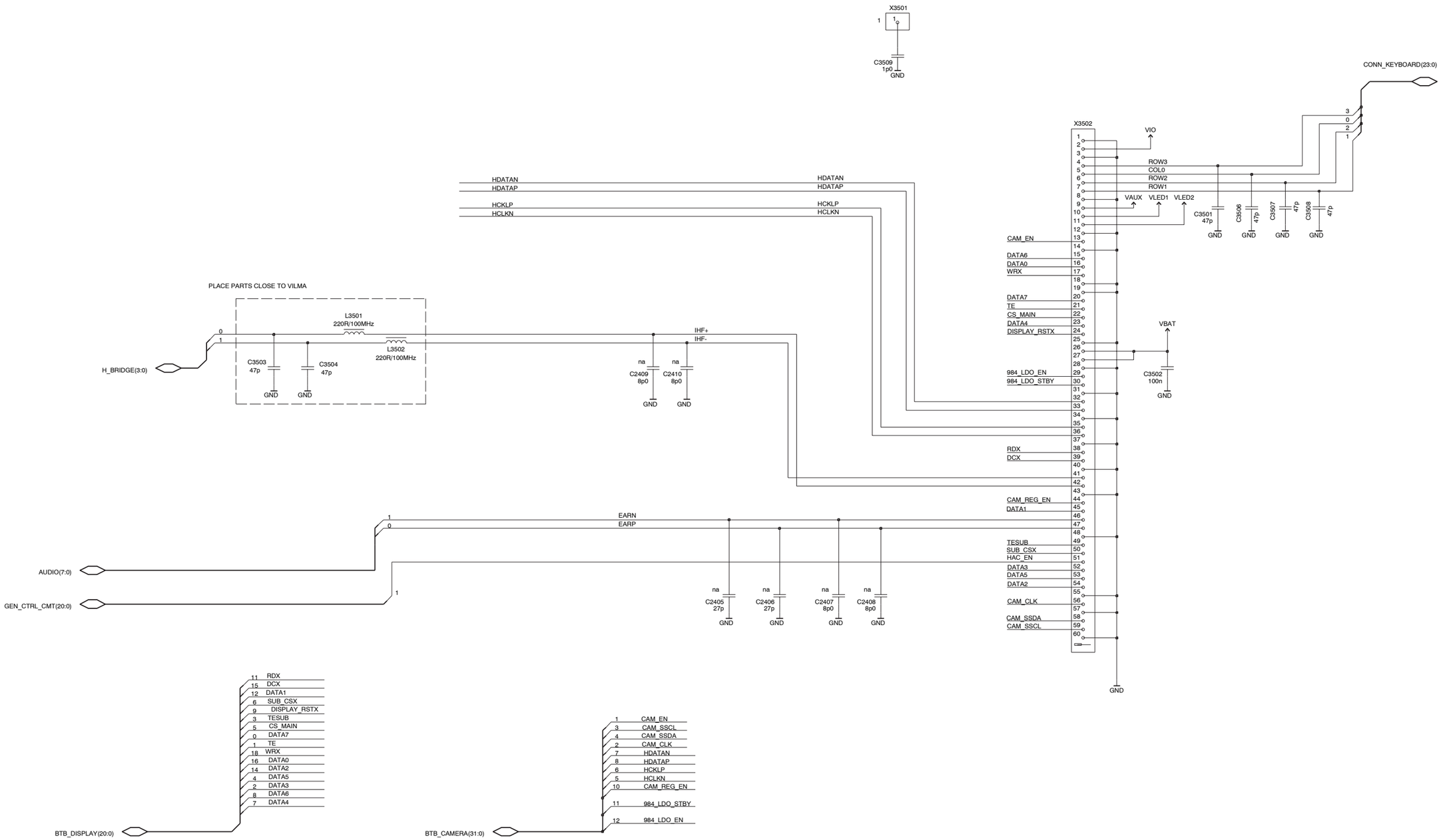

CONNECTORS

SHEET 4

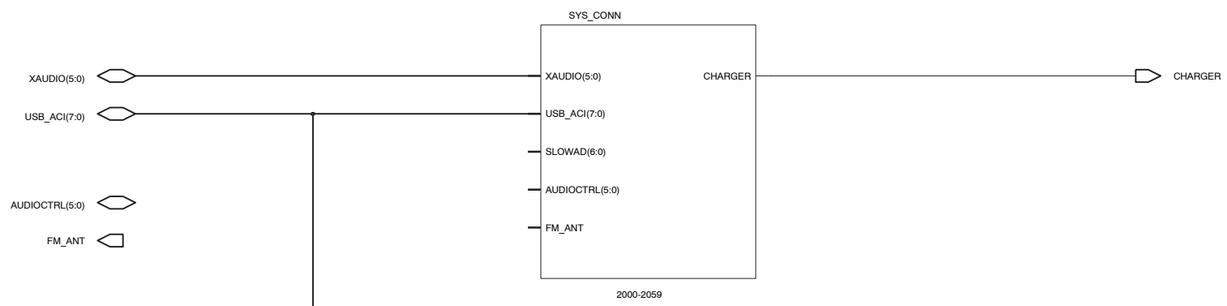

SHEET 5

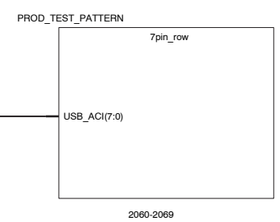

SHEET 6

SYSTEM CONNECTORS
DYNAMO, UHJ AND MICRO USB CONNECTORS

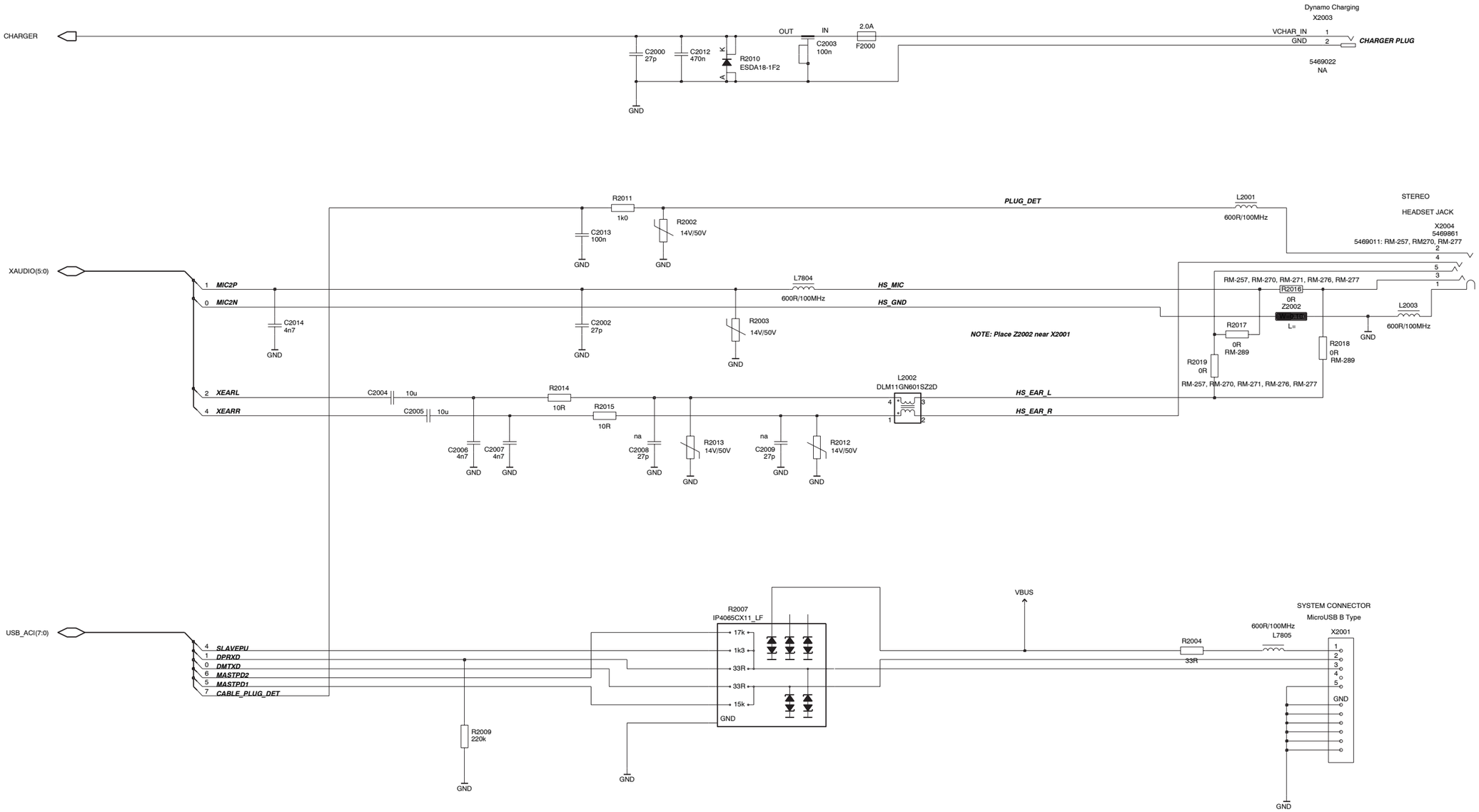

PRODUCTION TEST PATTERNS

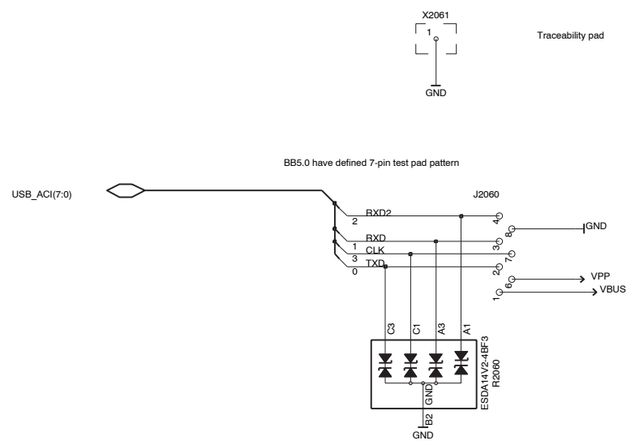

BATTERY CONNECTOR

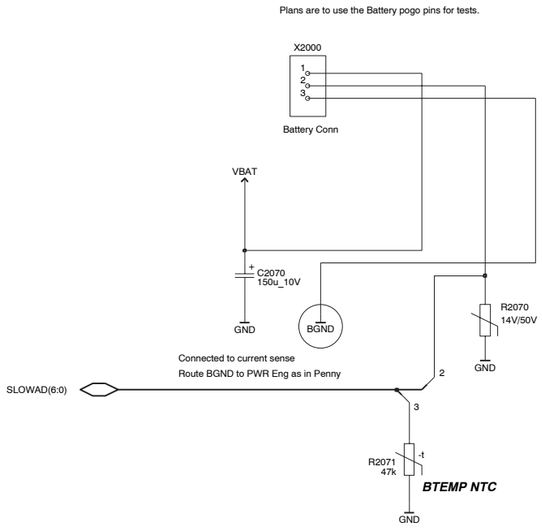

AUDIO

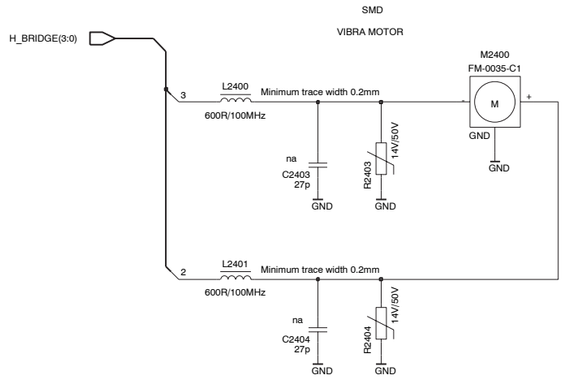
SMD
VIBRA MOTOR
H_BRIDGE(3:0)
M2400
FM-0035-C1
M
GND
3
L2400
Minimum trace width 0.2mm
600R/100MHz
na
C2403
27p
R2403
14V/50V
2
L2401
Minimum trace width 0.2mm
600R/100MHz
na
C2404
27p
R2404
14V/50V

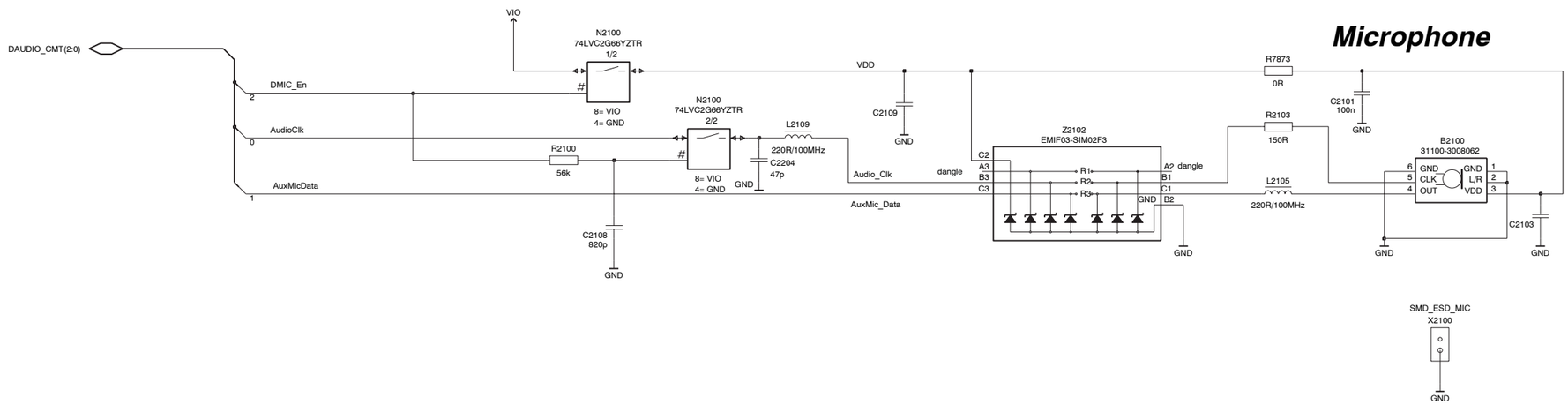
Microphone
DAUDIO_CMT(2:0)
DMIC_En
AudioClk
AuxMicData
VIO
N2100
74LVC2G66YZTR
1/2
8= VIO
4= GND
N2100
74LVC2G66YZTR
2/2
R2100
56k
C2108
820p
L2109
220R/100MHz
C2204
47p
C2109
VDD
Audio_Clk
AuxMic_Data
dangle
Z2102
EMIF03-SIM02F3
R7873
0R
C2101
100n
R2103
150R
L2105
220R/100MHz
B2100
31100-3008062
GND
CLK
OUT
L/R
VDD
C2103
SMD_ESD_MIC
X2100

UI

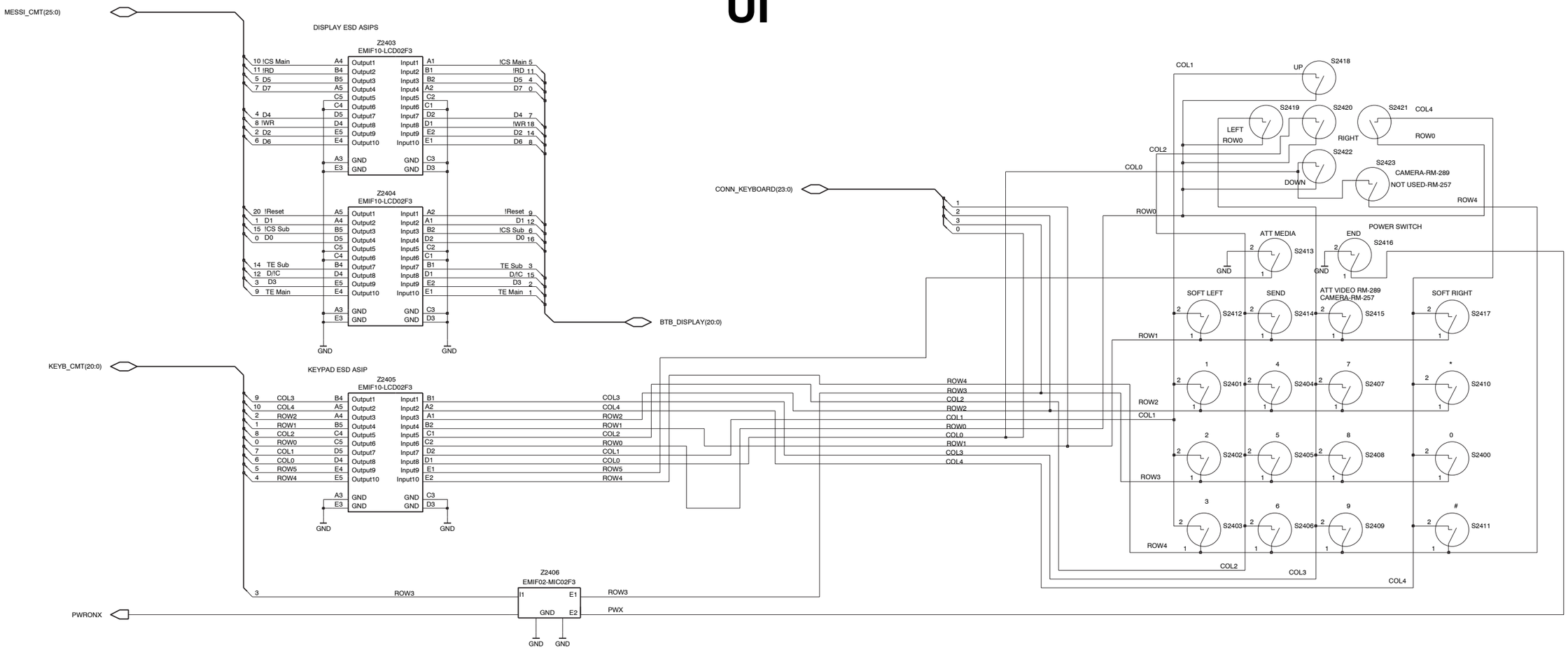
MESSI_CMT(25:0)
DISPLAY ESD ASIPS
Z2403
EMIF10-LCD02F3
Z2404
EMIF10-LCD02F3
BTB_DISPLAY(20:0)
CONN_KEYBOARD(23:0)
KEYB_CMT(20:0)
KEYPAD ESD ASIP
Z2405
EMIF10-LCD02F3
Z2406
EMIF02-MIC02F3
PWRONX
PWX
GND
UP
LEFT
RIGHT
DOWN
CAMERA-RM-289
NOT USED-RM-257
ATT MEDIA
END
POWER SWITCH
SOFT LEFT
SEND
ATT VIDEO RM-289
CAMERA-RM-257
SOFT RIGHT
COL1
COL2
COL3
COL4
ROW0
ROW1
ROW2
ROW3
ROW4

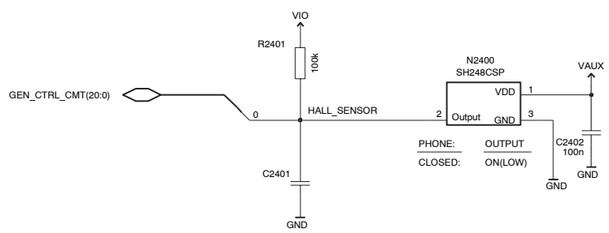
VIO
R2401
100k
GEN_CTRL_CMT(20:0)
HALL_SENSOR
C2401
GND
N2400
SH248CSP
VDD
Output
VAUX
PHONE:
CLOSED:
OUTPUT
ON(LOW)
C2402
100n

BLUETOOTH TOP LEVEL

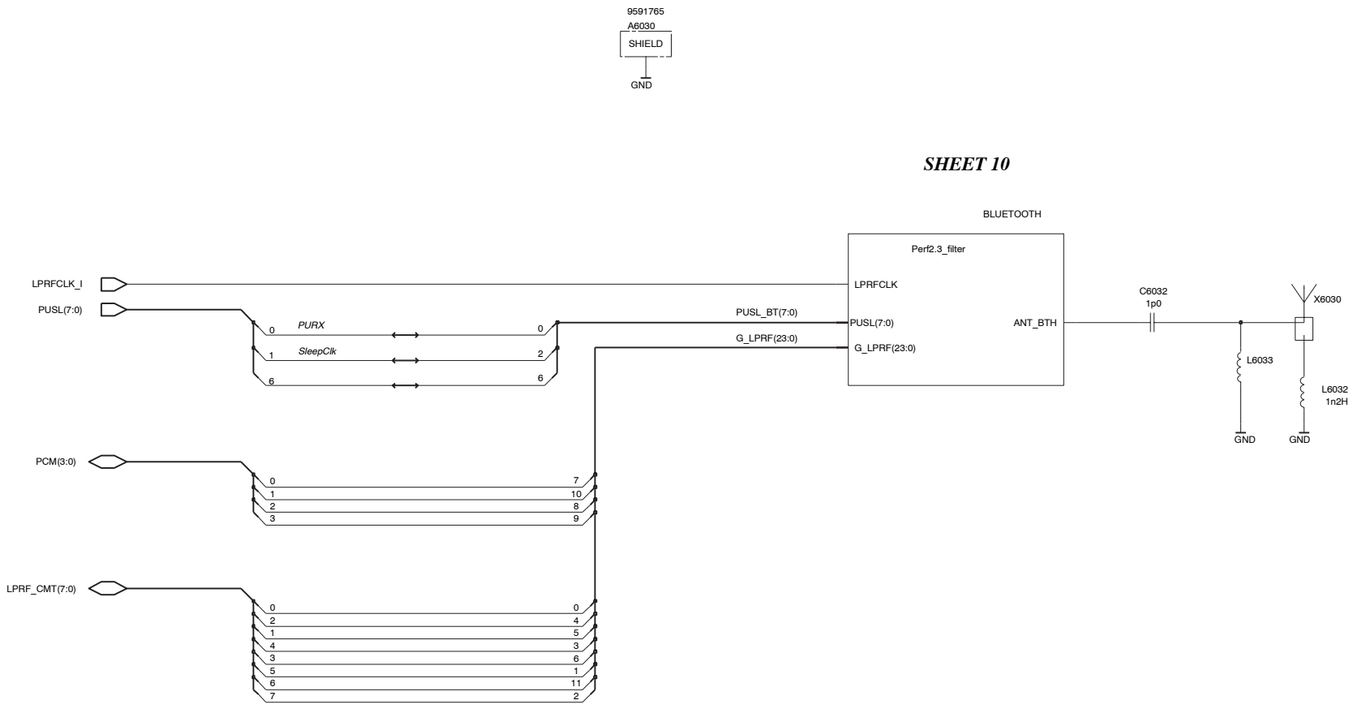

BLUETOOTH

BTH PERF2.3 (BC4 ROM1.0) A3.0 2006 WK 10

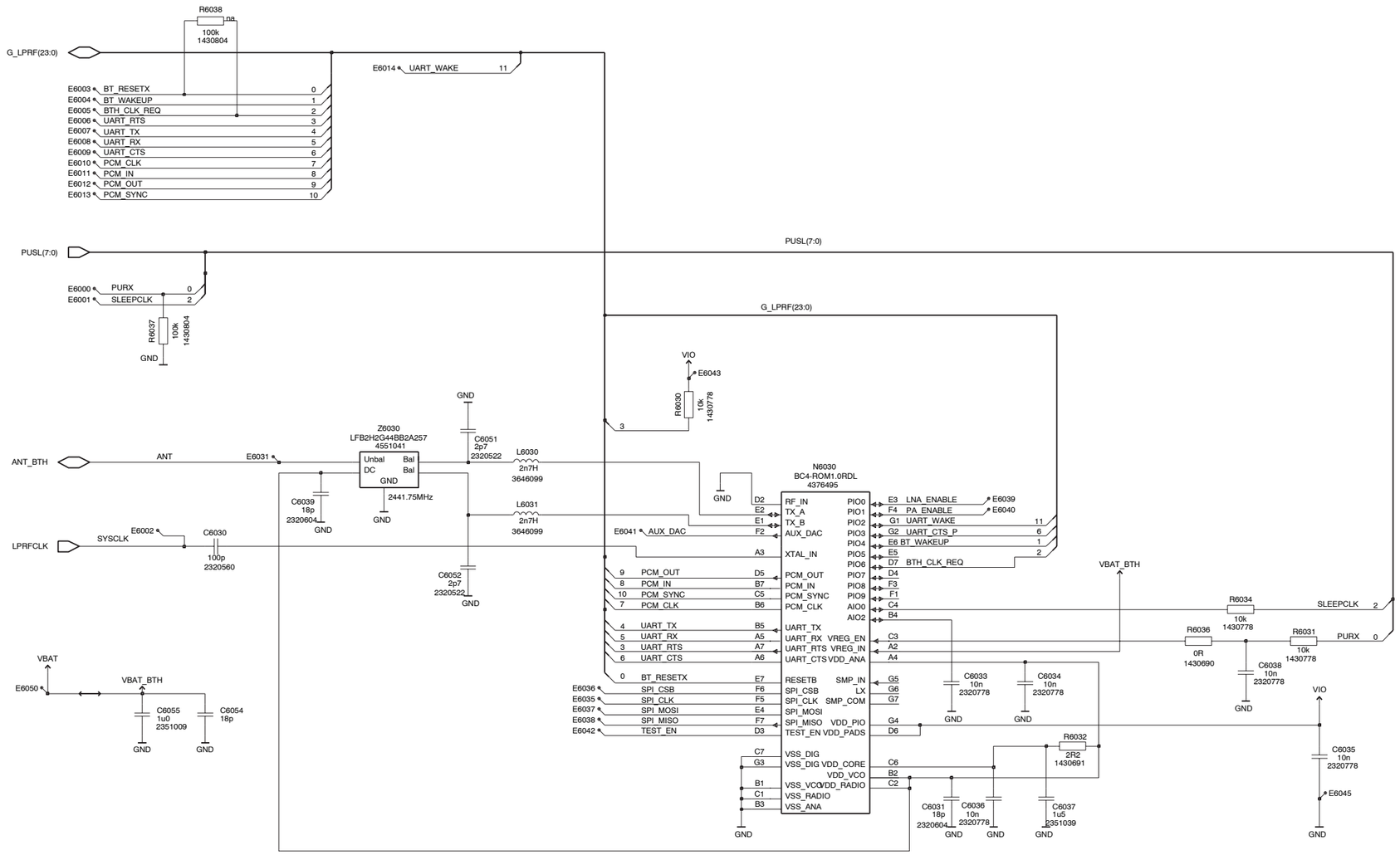

ENGINE

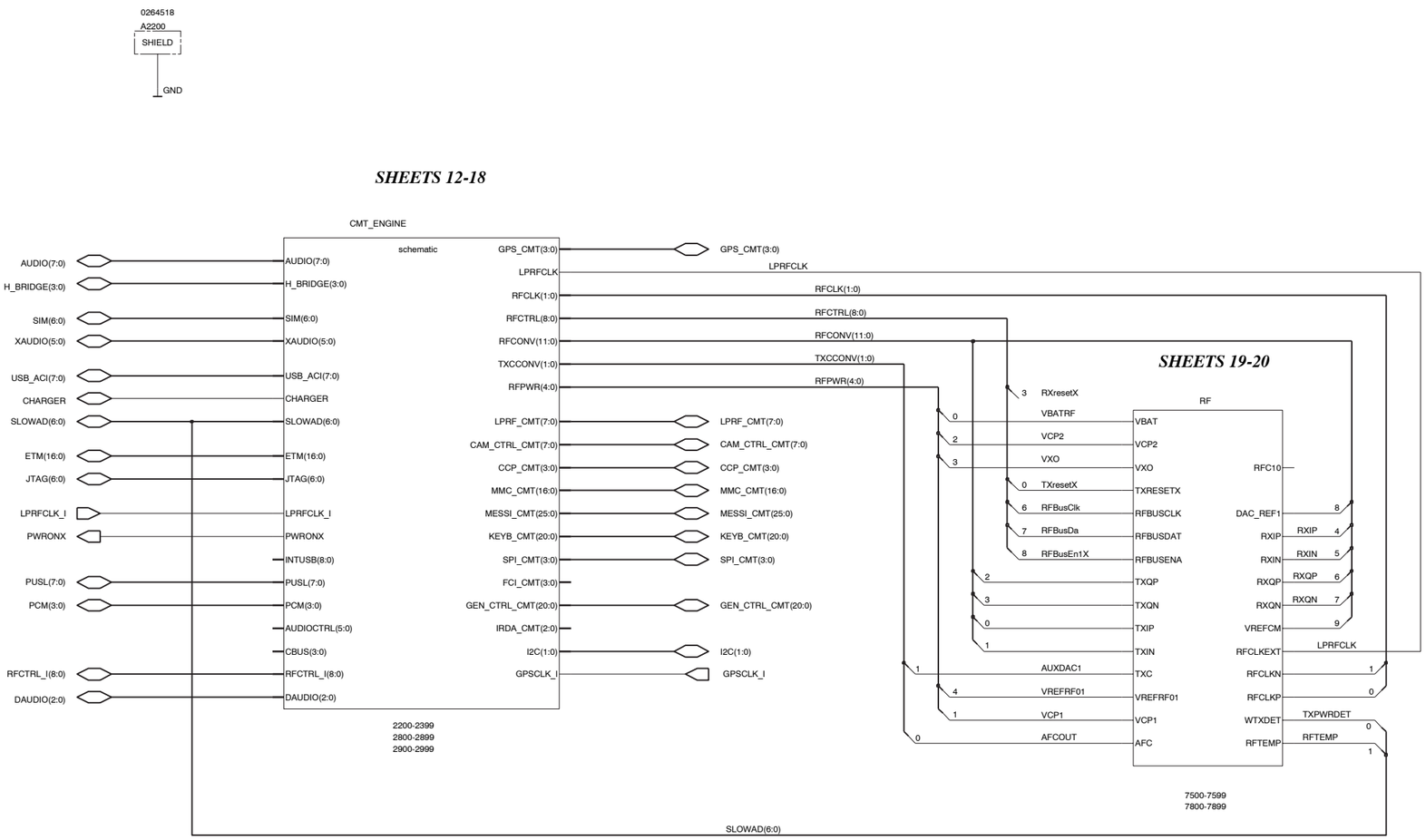
0264518
A2200
SHIELD
GND
SHEETS 12-18
CMT_ENGINE
schematic
AUDIO(7:0)
H_BRIDGE(3:0)
SIM(6:0)
XAUDIO(5:0)
USB_ACI(7:0)
CHARGER
SLOWAD(6:0)
ETM(16:0)
JTAG(6:0)
LPRFCLK_I
PWRONX
PUSL(7:0)
PCM(3:0)
RFCTRL_I(8:0)
DAUDIO(2:0)
INTUSB(8:0)
AUDIOCTRL(5:0)
CBUS(3:0)
GPS_CMT(3:0)
LPRFCLK
RFCLK(1:0)
RFCTRL(8:0)
RFCONV(11:0)
TXCCONV(1:0)
RFPWR(4:0)
LPRF_CMT(7:0)
CAM_CTRL_CMT(7:0)
CCP_CMT(3:0)
MMC_CMT(16:0)
MESSI_CMT(25:0)
KEYB_CMT(20:0)
SPI_CMT(3:0)
FCI_CMT(3:0)
GEN_CTRL_CMT(20:0)
IRDA_CMT(2:0)
I2C(1:0)
GPSCLK_I
2200-2399
2800-2899
2900-2999
SHEETS 19-20
RF
RXresetX
VBATRF
VCP2
VXO
TXresetX
RFBusClk
RFBusDa
RFBusEn1X
VBAT
VCP2
VXO
TXRESETX
RFBUSCLK
RFBUSDAT
RFBUSENA
TXQP
TXQN
TXIP
TXIN
TXC
VREFRF01
VCP1
AFC
AUXDAC1
VREFRF01
VCP1
AFCOUT
RFC10
DAC_REF1
RXIP
RXIN
RXQP
RXQN
VREFCM
RFCLKEXT
RFCLKN
RFCLKP
WTXDET
RFTEMP
TXPWRDET
7500-7599
7800-7899
SLOWAD(6:0)

CMT ENGINE TOP LEVEL

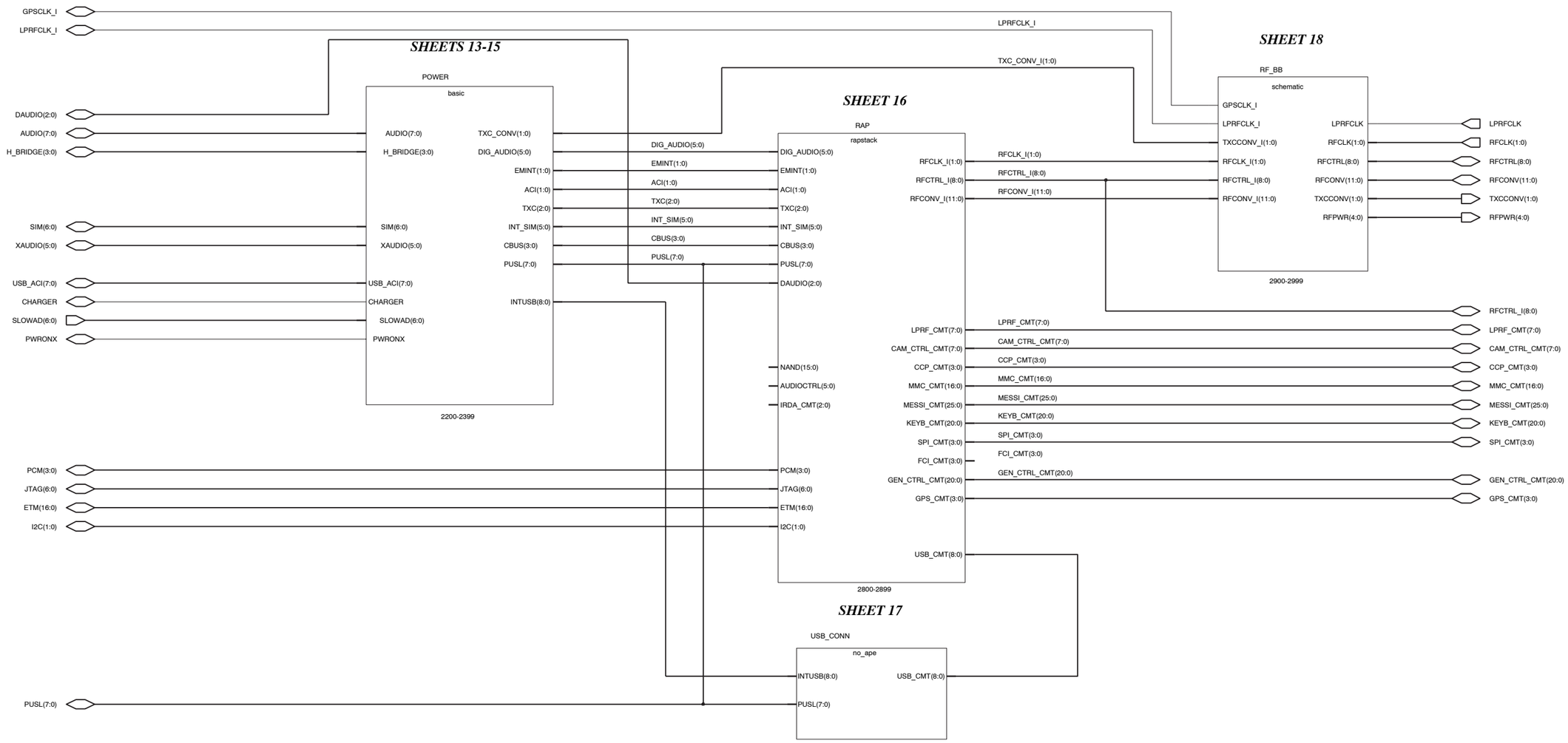

POWER TOP LEVEL

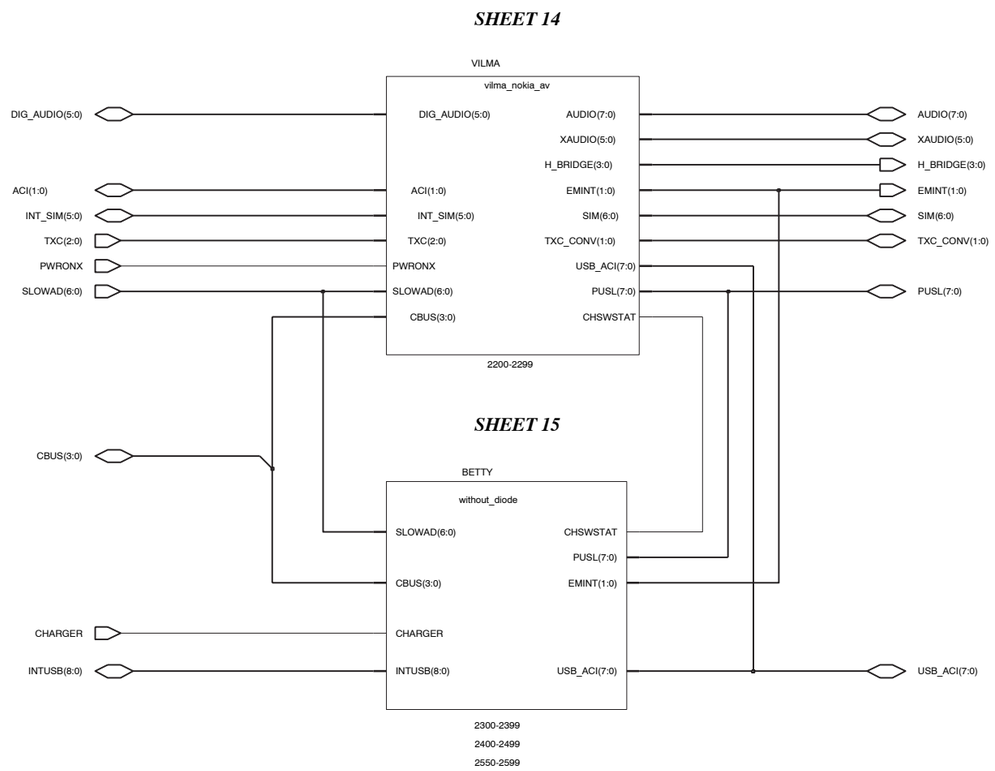

VILMA

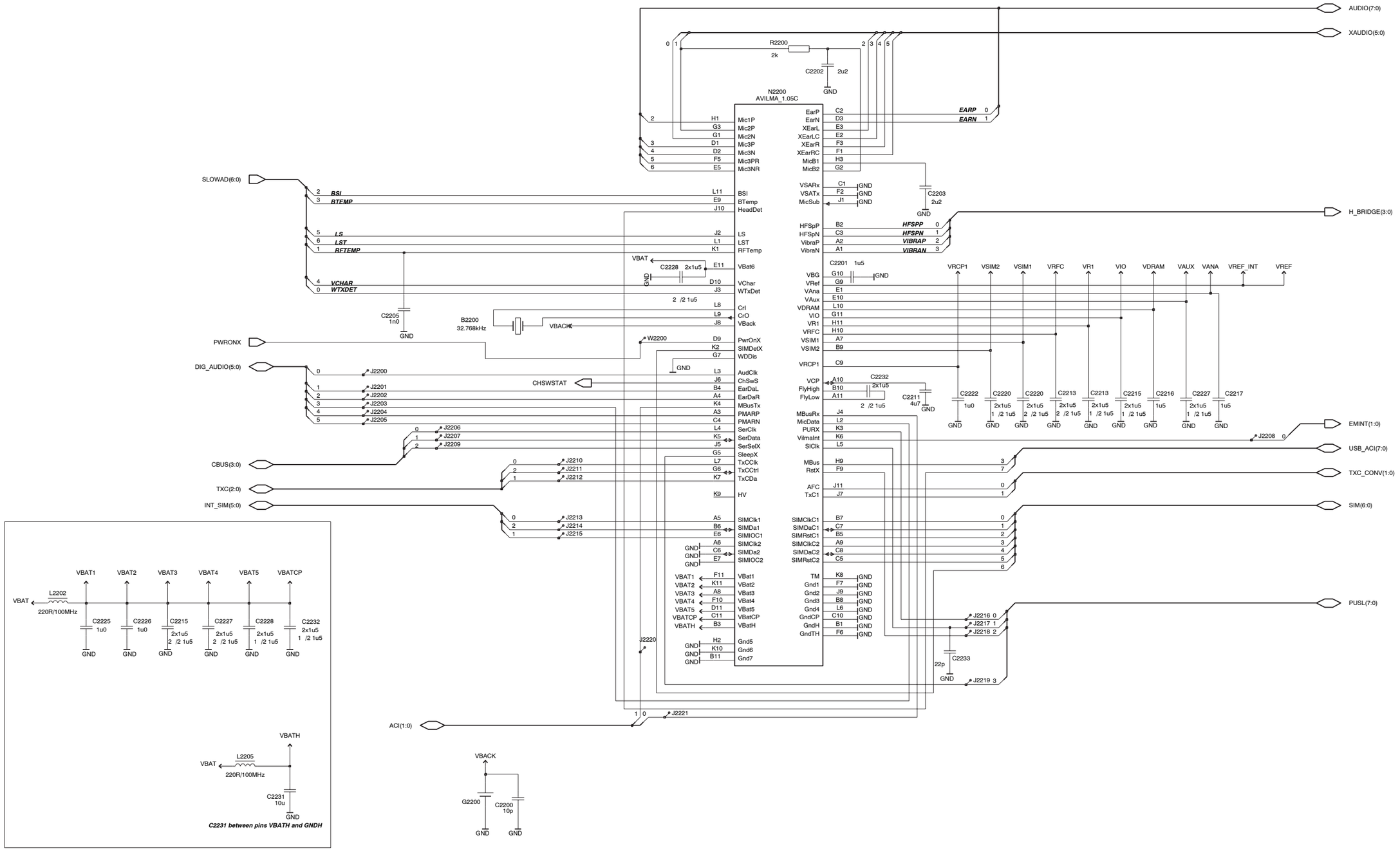
N2200
AVILMA_1.05C
AUDIO(7:0)
XAUDIO(5:0)
H_BRIDGE(3:0)
EMINT(1:0)
USB_ACI(7:0)
TXC_CONV(1:0)
SIM(6:0)
PUSL(7:0)
SLOWAD(6:0)
PWRONX
DIG_AUDIO(5:0)
CBUS(3:0)
TXC(2:0)
INT_SIM(5:0)
ACI(1:0)
CHSWSTAT
R2200
2k
C2202
2u2
C2203
2u2
C2201
1u5
C2205
1n0
B2200
32.768kHz
VBACK
VBAT
C2228
2x1u5
W2200
J2220
J2221
J2208
J2216
J2217
J2218
J2219
C2233
22p
C2232
C2211
4u7
VRCP1
VSIM2
VSIM1
VRFC
VR1
VIO
VDRAM
VAUX
VANA
VREF_INT
VREF
VBAT1
VBAT2
VBAT3
VBAT4
VBAT5
VBATCP
VBATH
L2202
220R/100MHz
C2225
1u0
C2226
1u0
C2215
2x1u5
C2227
2x1u5
C2228
2x1u5
C2232
2x1u5
L2205
220R/100MHz
C2231
10u
C2231 between pins VBATH and GNDH
G2200
C2200
10p
GND

BETTY AND LED DRIVERS

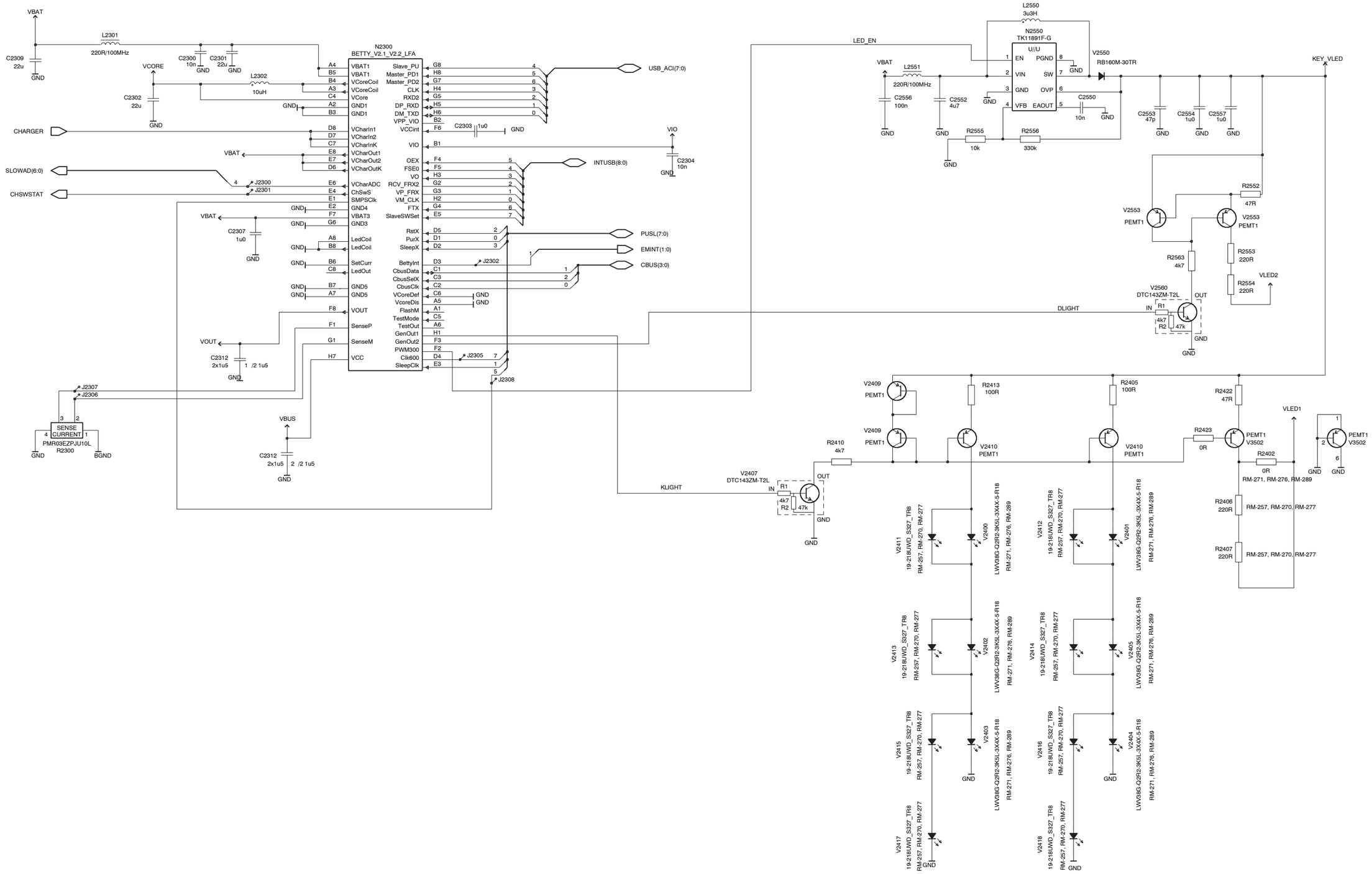

STACKED RAP+MEM

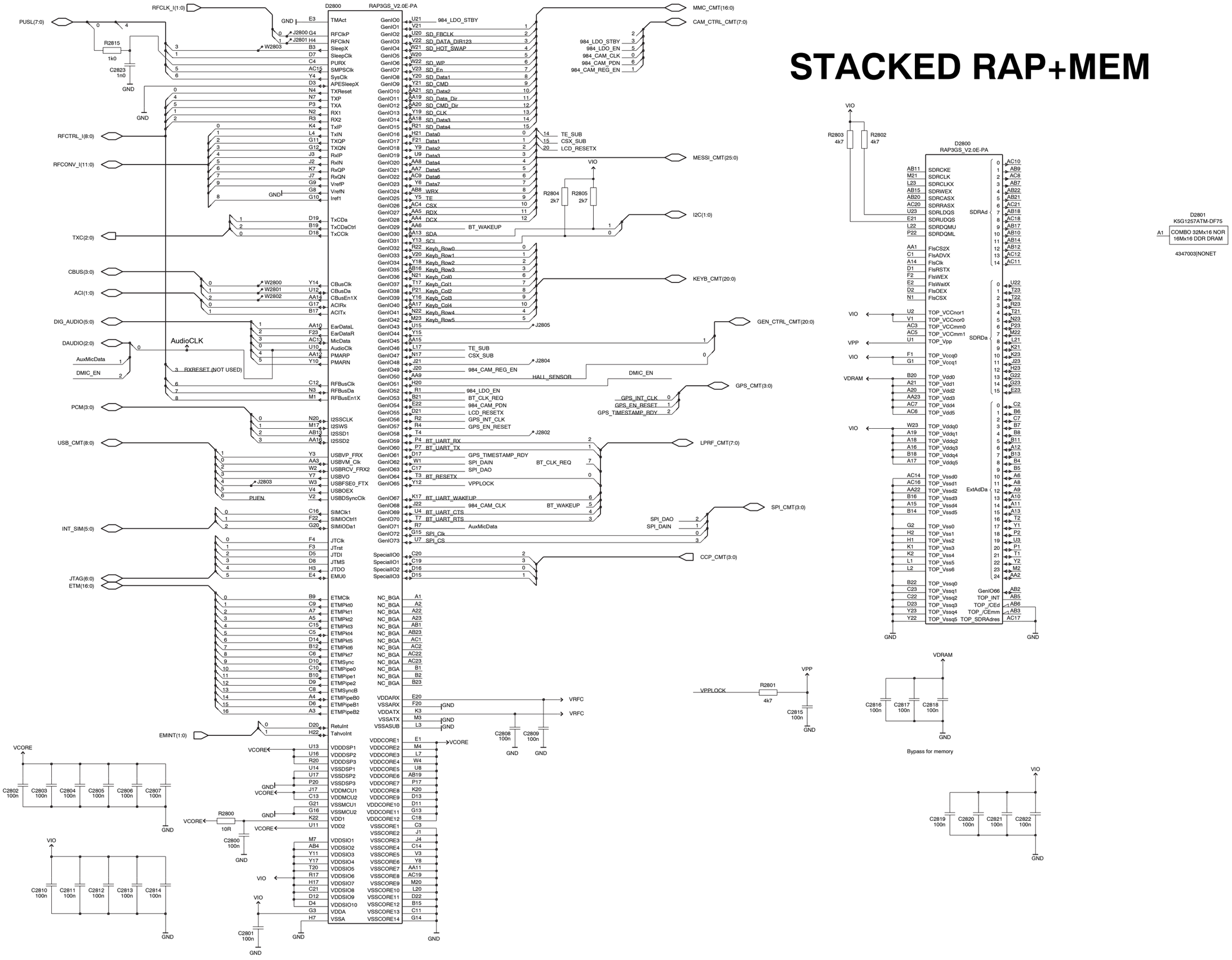

USB W/O APE

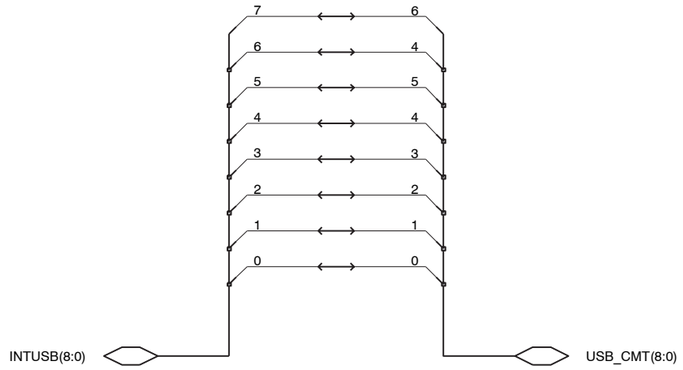

BB/RF IF

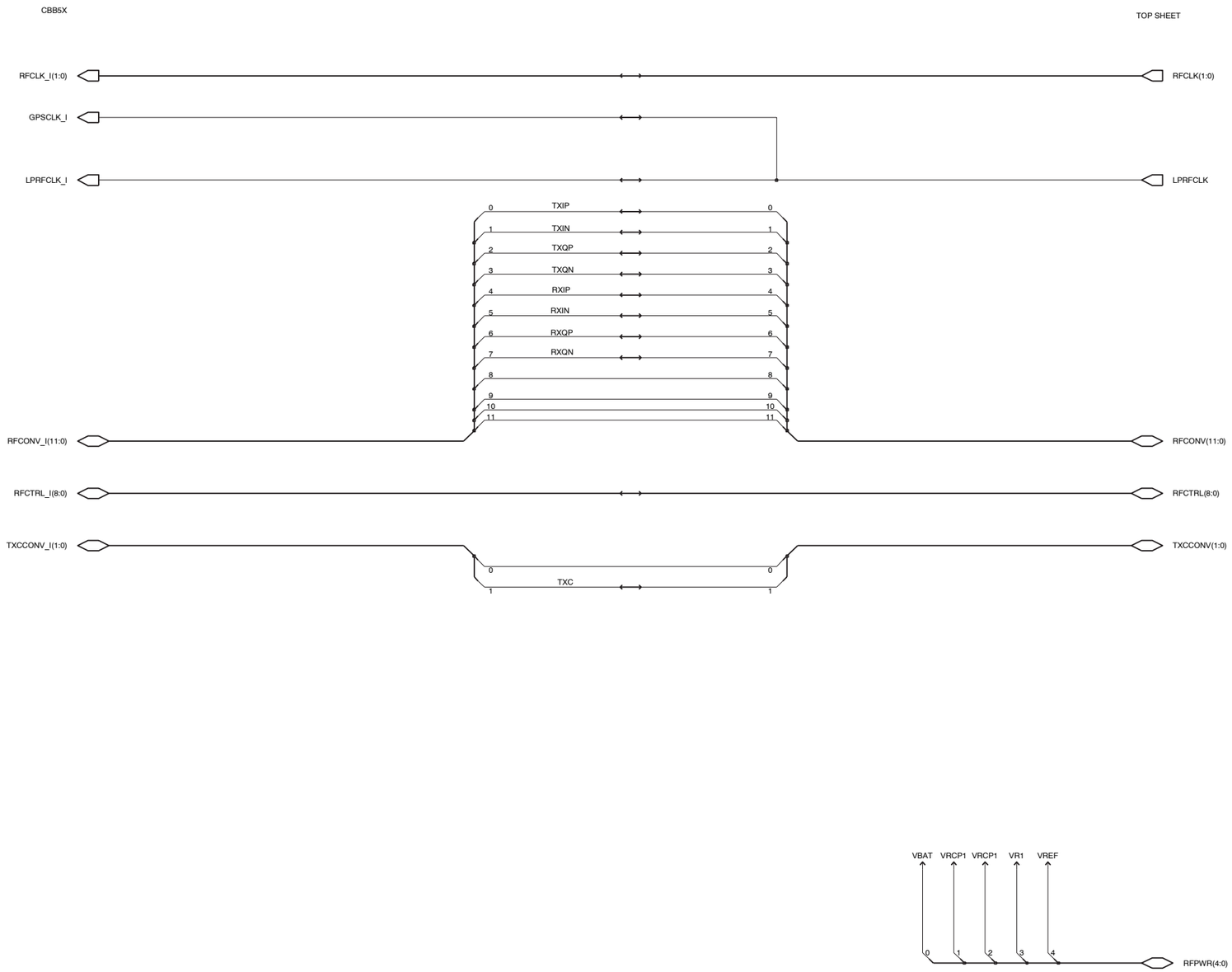
CBB5X
TOP SHEET
RFCLK_I(1:0)
RFCLK(1:0)
GPSCLK_I
LPRFCLK_I
LPRFCLK
TXIP
TXIN
TXQP
TXQN
RXIP
RXIN
RXQP
RXQN
RFCONV_I(11:0)
RFCONV(11:0)
RFCTRL_I(8:0)
RFCTRL(8:0)
TXCCONV_I(1:0)
TXCCONV(1:0)
TXC
VBAT
VRCP1
VRCP1
VR1
VREF
RFPWR(4:0)

RF TOP LEVEL

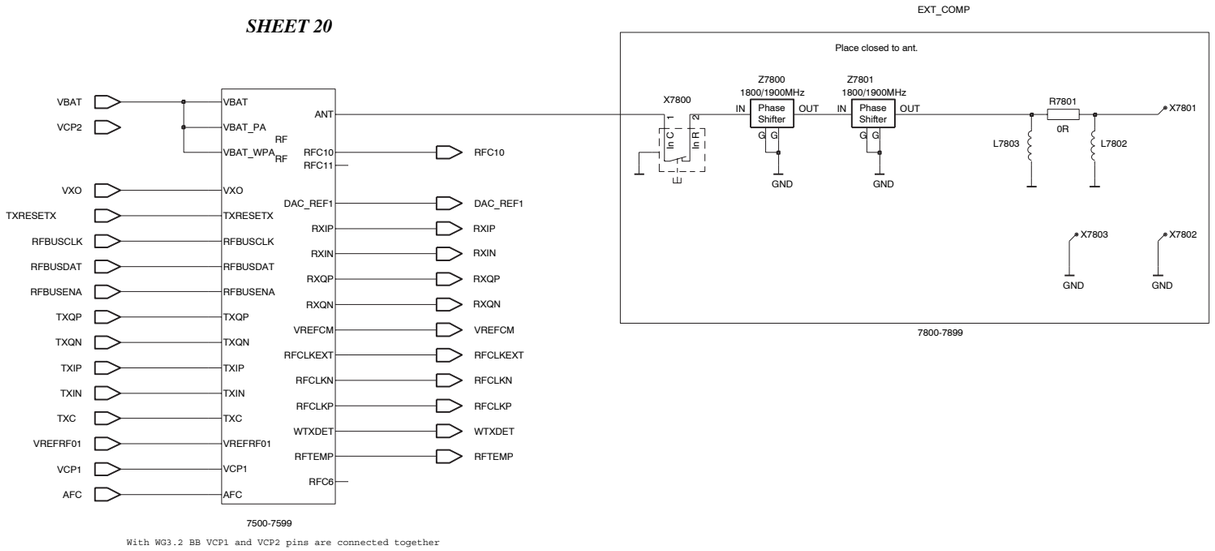
SHEET 20
VBAT
VCP2
VXO
TXRESETX
RFBUSCLK
RFBUSDAT
RFBUSENA
TXQP
TXQN
TXIP
TXIN
TXC
VREFRF01
VCP1
AFC
VBAT
VBAT_PA
VBAT_WPA
RF
RF
VXO
TXRESETX
RFBUSCLK
RFBUSDAT
RFBUSENA
TXQP
TXQN
TXIP
TXIN
TXC
VREFRF01
VCP1
AFC
ANT
RFC10
RFC11
DAC_REF1
RXIP
RXIN
RXQP
RXQN
VREFCM
RFCLKEXT
RFCLKN
RFCLKP
WTXDET
RFTEMP
RFC6
RFC10
DAC_REF1
RXIP
RXIN
RXQP
RXQN
VREFCM
RFCLKEXT
RFCLKN
RFCLKP
WTXDET
RFTEMP
7500-7599
With WG3.2 BB VCP1 and VCP2 pins are connected together
EXT_COMP
Place closed to ant.
X7800
Z7800
1800/1900MHz
Phase Shifter
IN
OUT
G G
GND
Z7801
1800/1900MHz
Phase Shifter
IN
OUT
G G
GND
R7801
0R
L7803
L7802
X7801
X7803
X7802
GND
GND
7800-7899

CAMERA INTERFACE

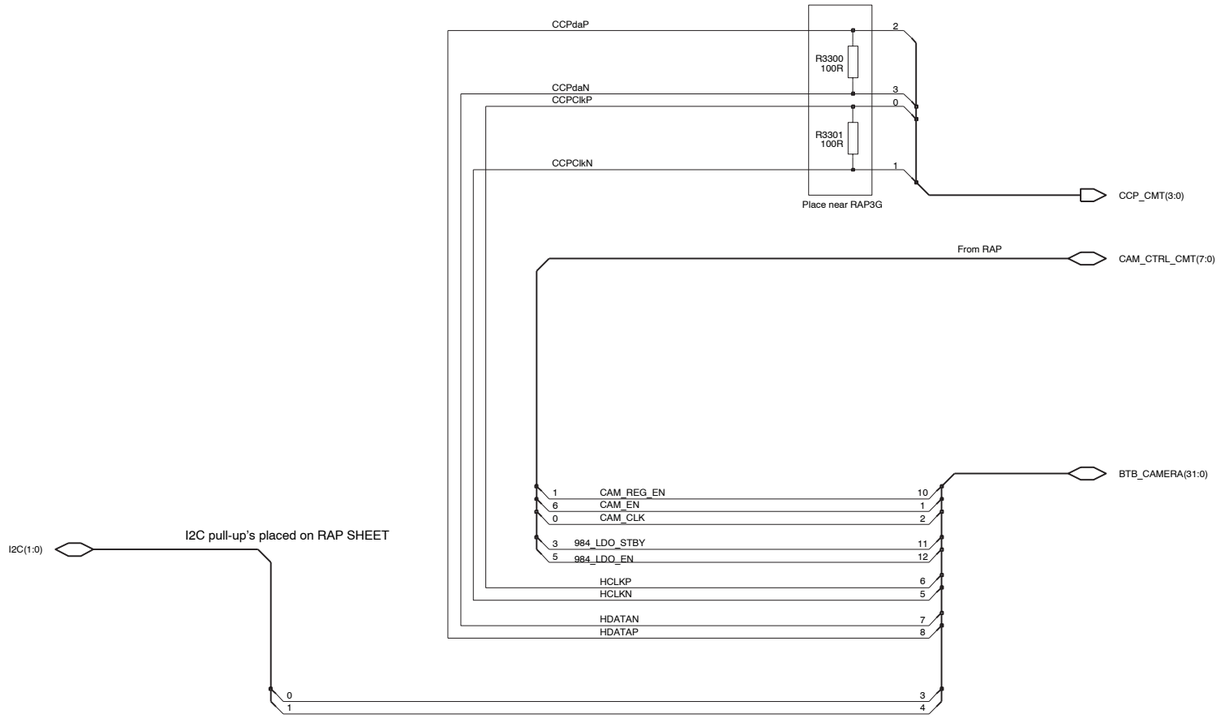

SIM

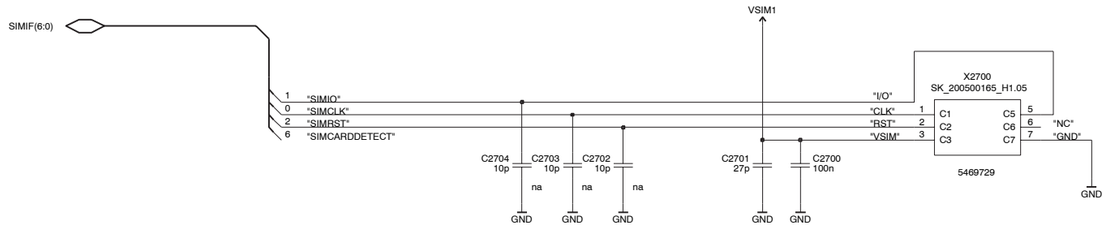
SIMIF(6:0)
1 "SIMIO"
0 "SIMCLK"
2 "SIMRST"
6 "SIMCARDDETECT"
VSIM1
X2700
SK_200500165_H1.05
"I/O" C1 1
"CLK" C2 2
"RST" C3 3
"VSIM" C5 5
C6 6 "NC"
C7 7 "GND"
5469729
GND
C2704 10p na GND
C2703 10p na GND
C2702 10p na GND
C2701 27p GND
C2700 100n GND

MICROSD

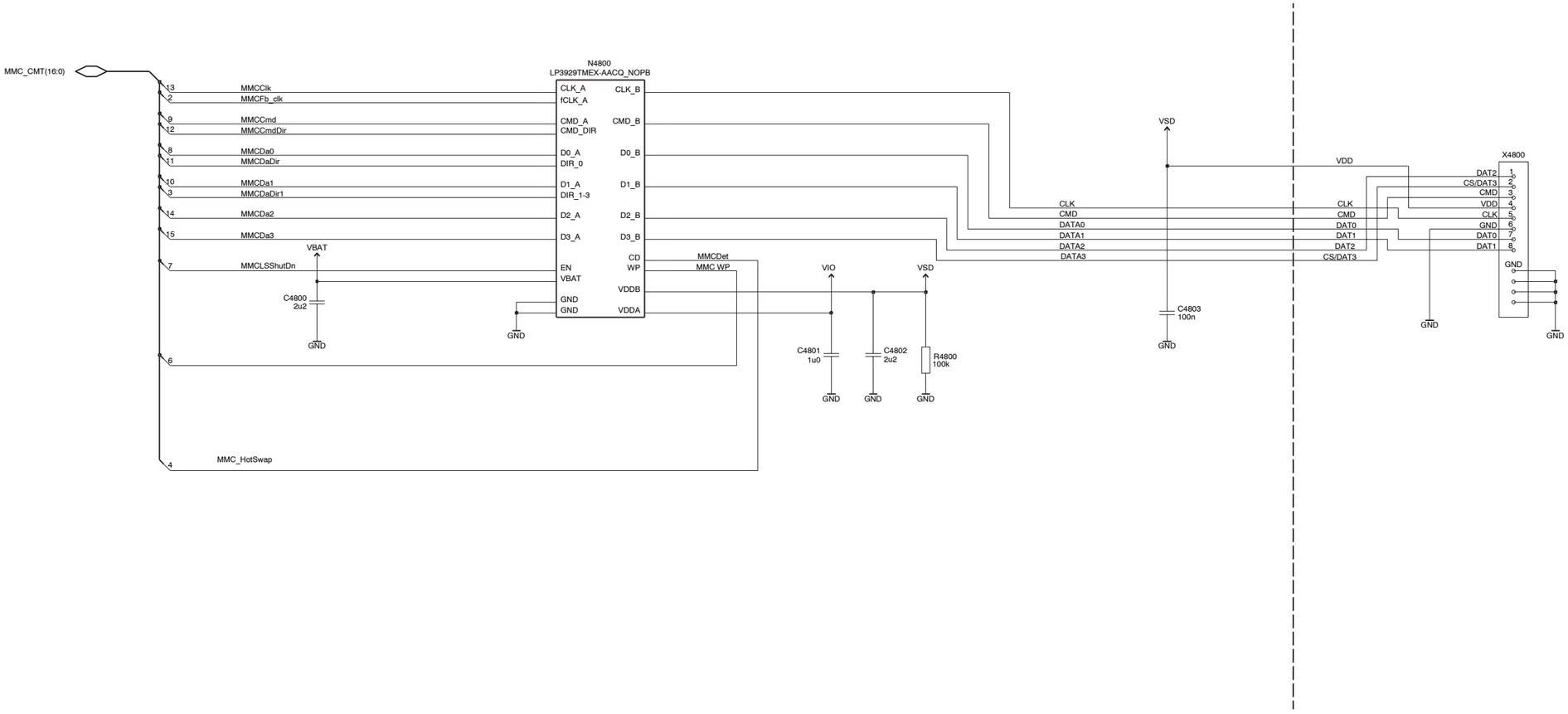
MMC_CMT(16:0)
N4800
LP3929TMEX-AACQ_NOPB
13 MMCClk
2 MMCFb_clk
9 MMCCmd
12 MMCCmdDir
8 MMCDa0
11 MMCDaDir
10 MMCDa1
3 MMCDaDir1
14 MMCDa2
15 MMCDa3
7 MMCLSShutDn
6
4 MMC_HotSwap
CLK_A
fCLK_A
CMD_A
CMD_DIR
D0_A
DIR_0
D1_A
DIR_1-3
D2_A
D3_A
EN
VBAT
GND
GND
CLK_B
CMD_B
D0_B
D1_B
D2_B
D3_B
CD
WP
VDDB
VDDA
MMCDet
MMC_WP
VBAT
C4800
2u2
GND
GND
VIO
VSD
C4801
1u0
C4802
2u2
R4800
100k
GND
GND
GND
VSD
C4803
100n
GND
CLK
CMD
DATA0
DATA1
DATA2
DATA3
VDD
CLK
CMD
DAT0
DAT1
DAT2
CS/DAT3
X4800
DAT2 1
CS/DAT3 2
CMD 3
VDD 4
CLK 5
GND 6
DAT0 7
DAT1 8
GND
GND
GND

EMULATOR PADS

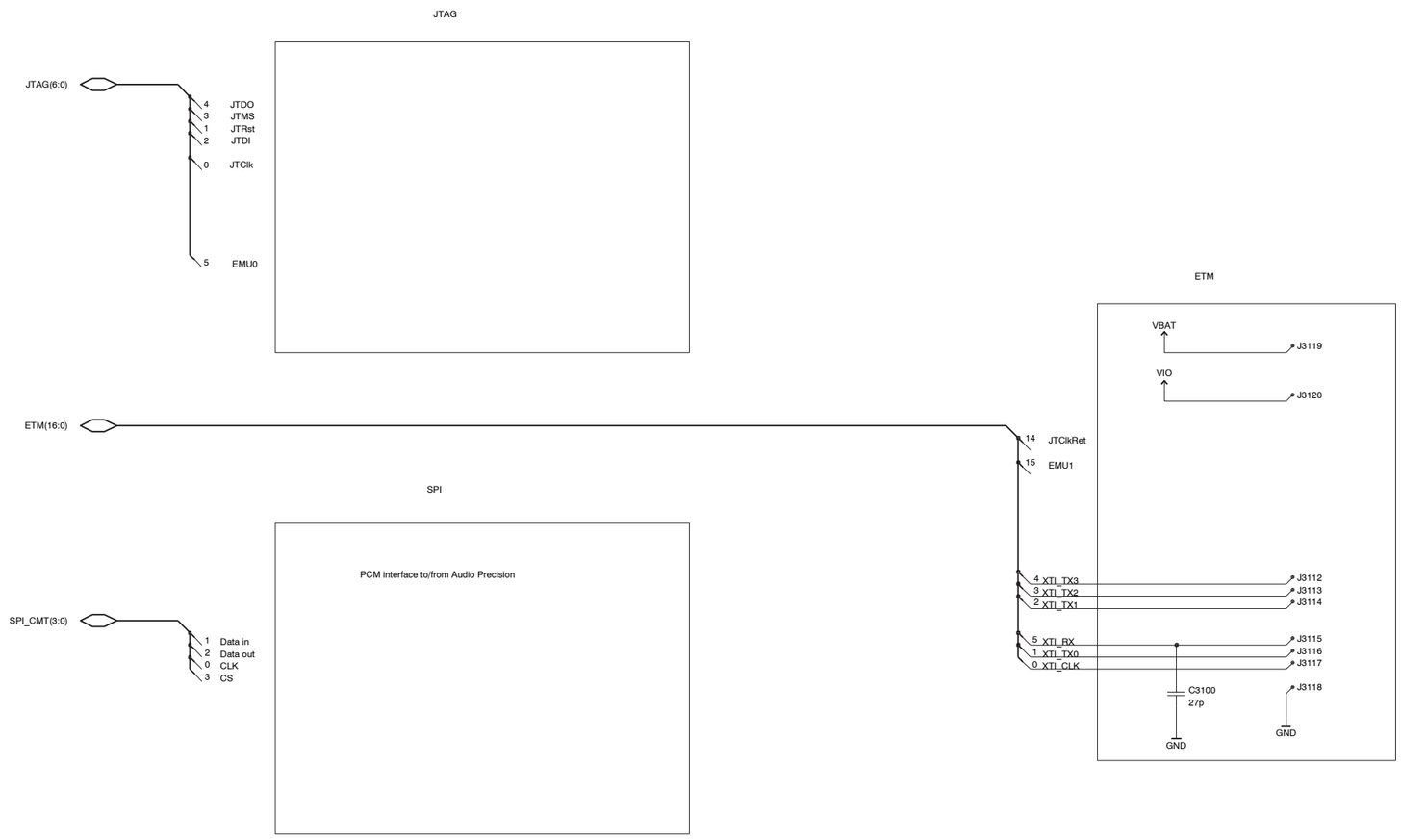

GPS TOP LEVEL

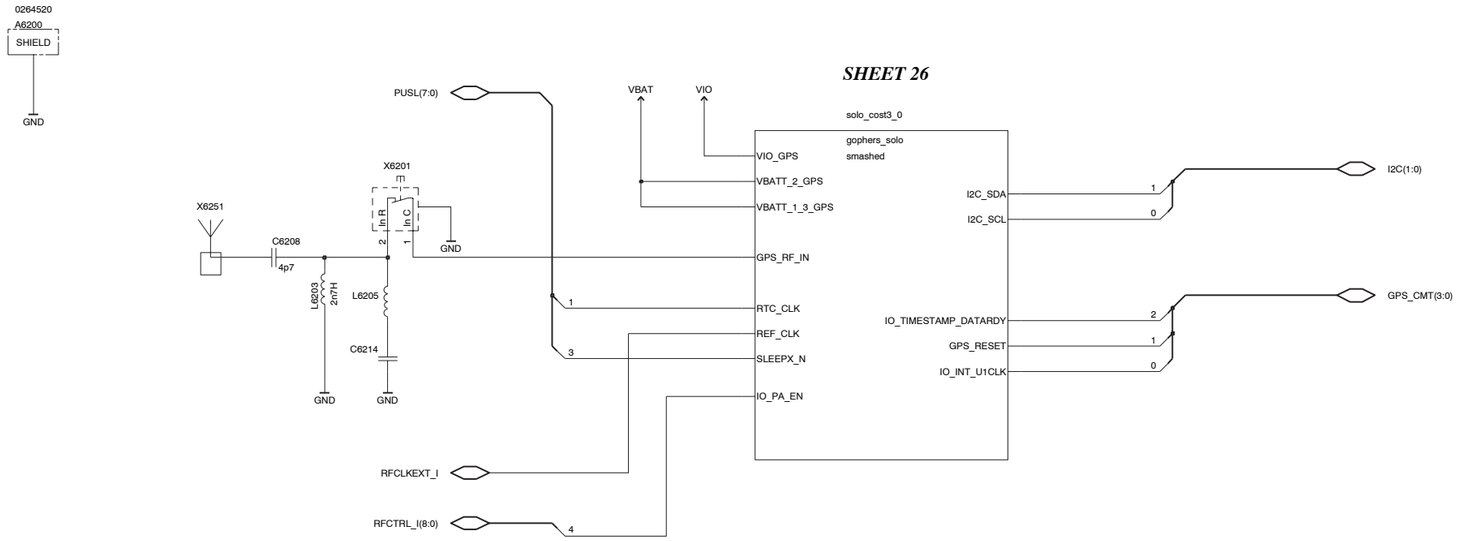

GPS

GPS COST 3.0 A1.5 2006 WK18 RELEASE

PIN	CONNECT TO	
	VIO_GPS	GND
I2C_UART_N	I2C MODE	UART MODE
BYPASS	CLOCK SLICER BYPASSED MODE [REF_CLK IS DIGITAL]	CLOCK SLICER ENABLED MODE [REF_CLK IS ANALOG]

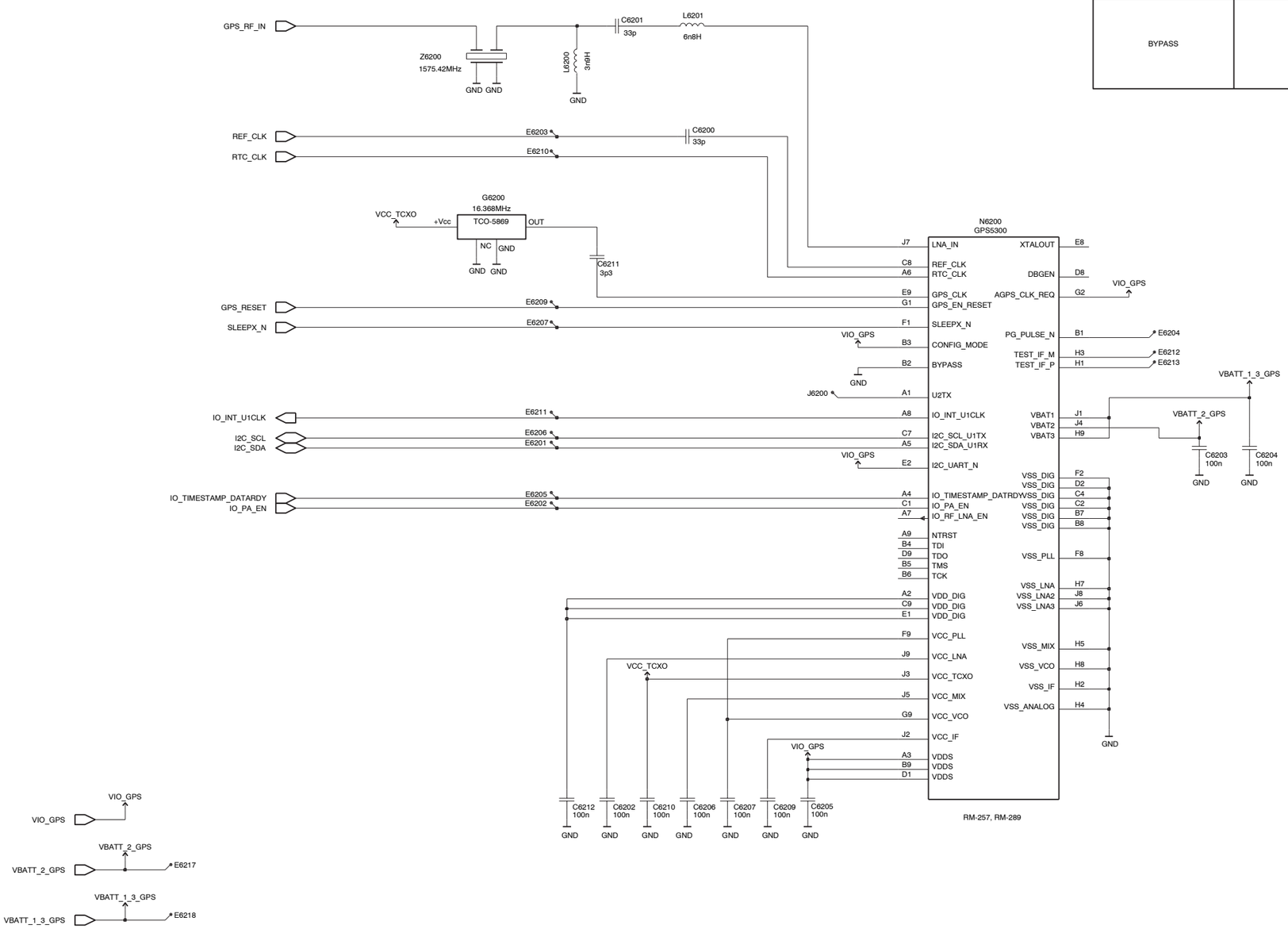

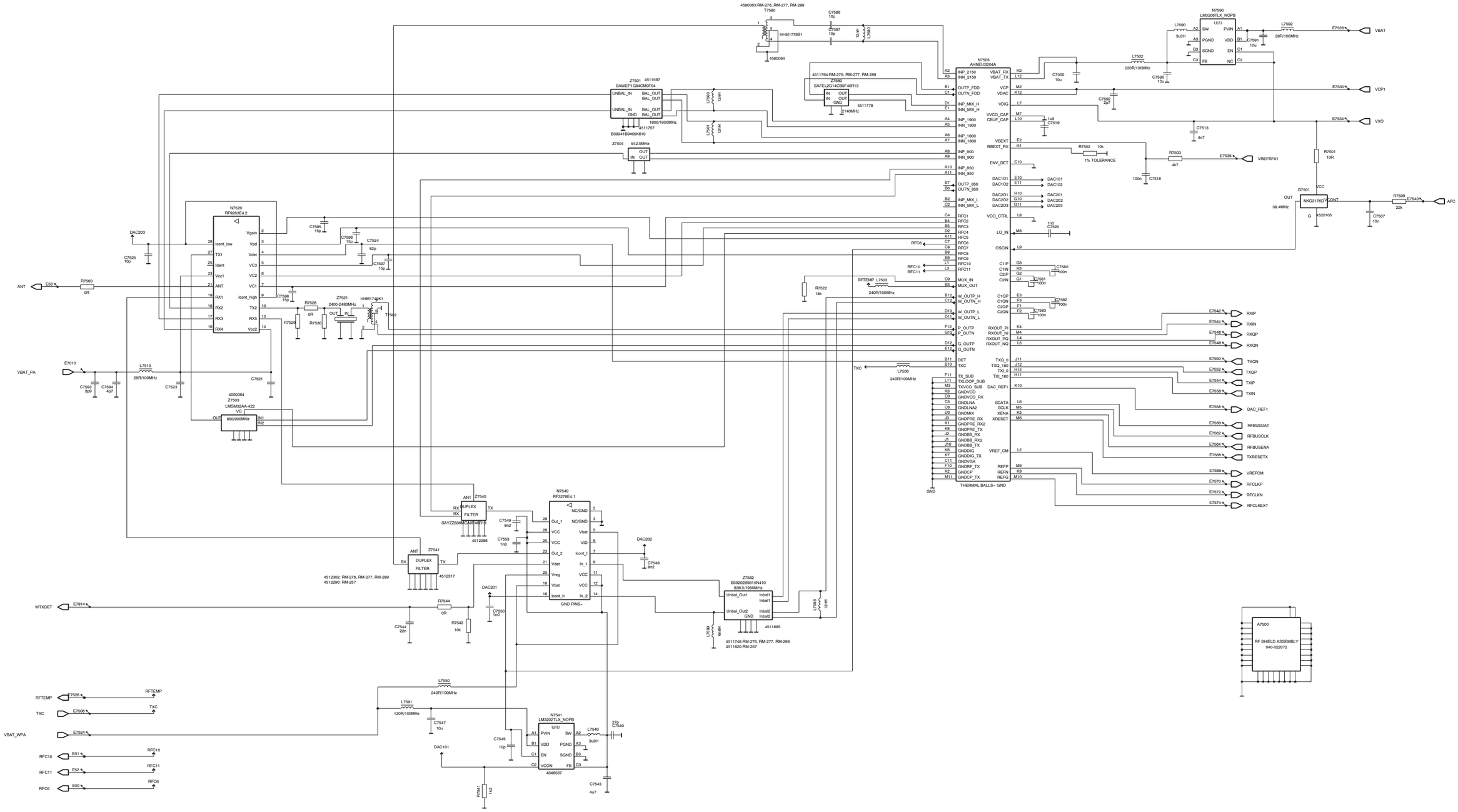
N7505
AHNEUS204A
N7520
RF9283E4.2
N7540
RF3278E4.1
N7541
LM3202TLX_NOPB
N7590
LM3206TLX_NOPB
Z7501
SAWEP1G84CM0F04
Z7503
LMSM32AA-422
Z7540
Z7541
Z7582
B39202B9315N410
G7501
NKG3176D
A7500
RF SHIELD ASSEMBLY
040-022072
THERMAL BALLS+ GND
GND PINS+
VBAT
VCP1
VXO
VREFRF01
AFC
RXIP
RXIN
RXQP
RXQN
TXQN
TXQP
TXIP
TXIN
DAC_REF1
RFBUSDAT
RFBUSCLK
RFBUSENA
TXRESETX
VREFCM
RFCLKP
RFCLKN
RFCLKEXT
ANT
VBAT_PA
WTXDET
RFTEMP
TXC
VBAT_WPA
RFC10
RFC11
RFC6

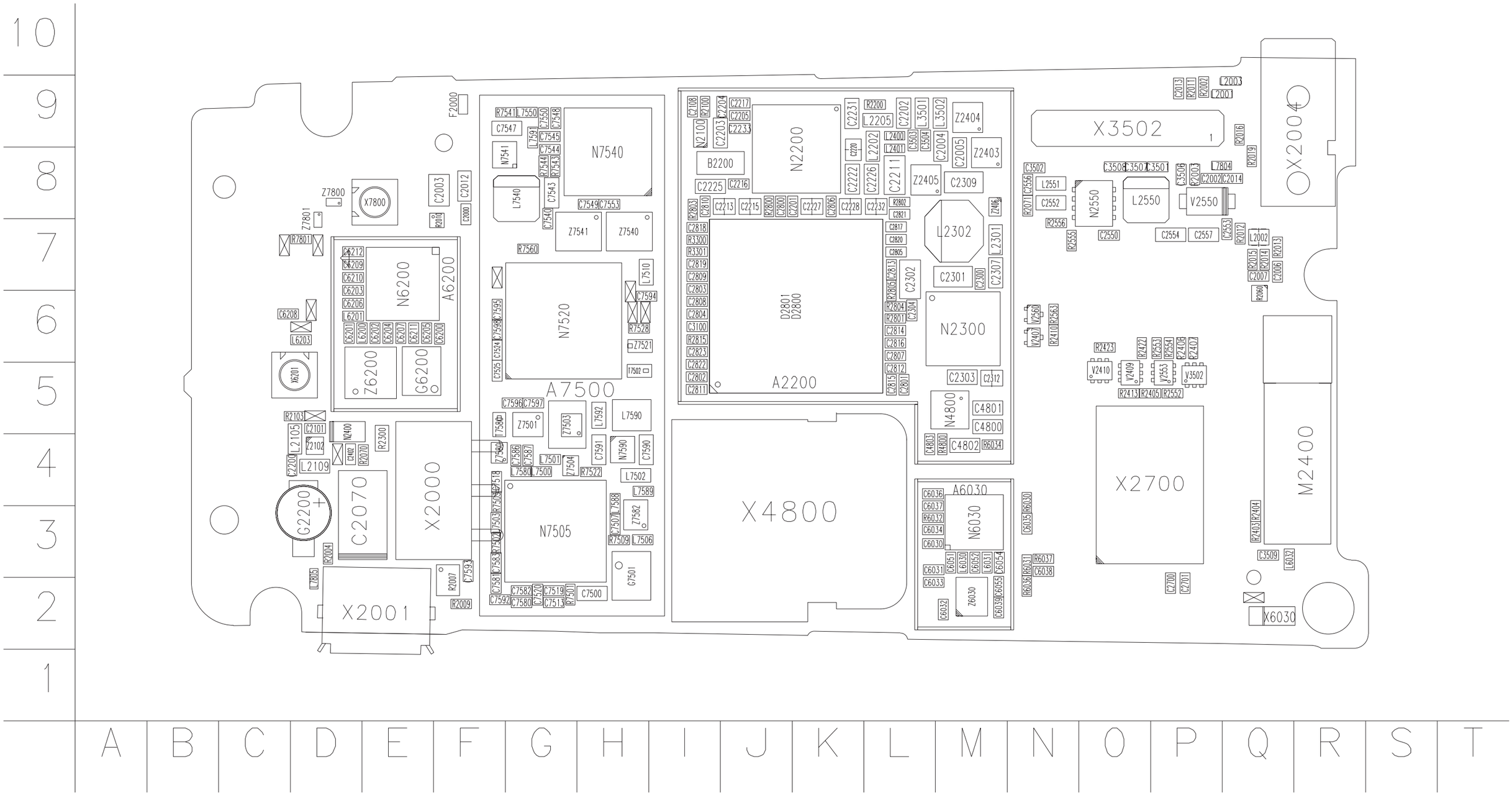

RM-257_2ab_09s_asmdrw_t.pdf

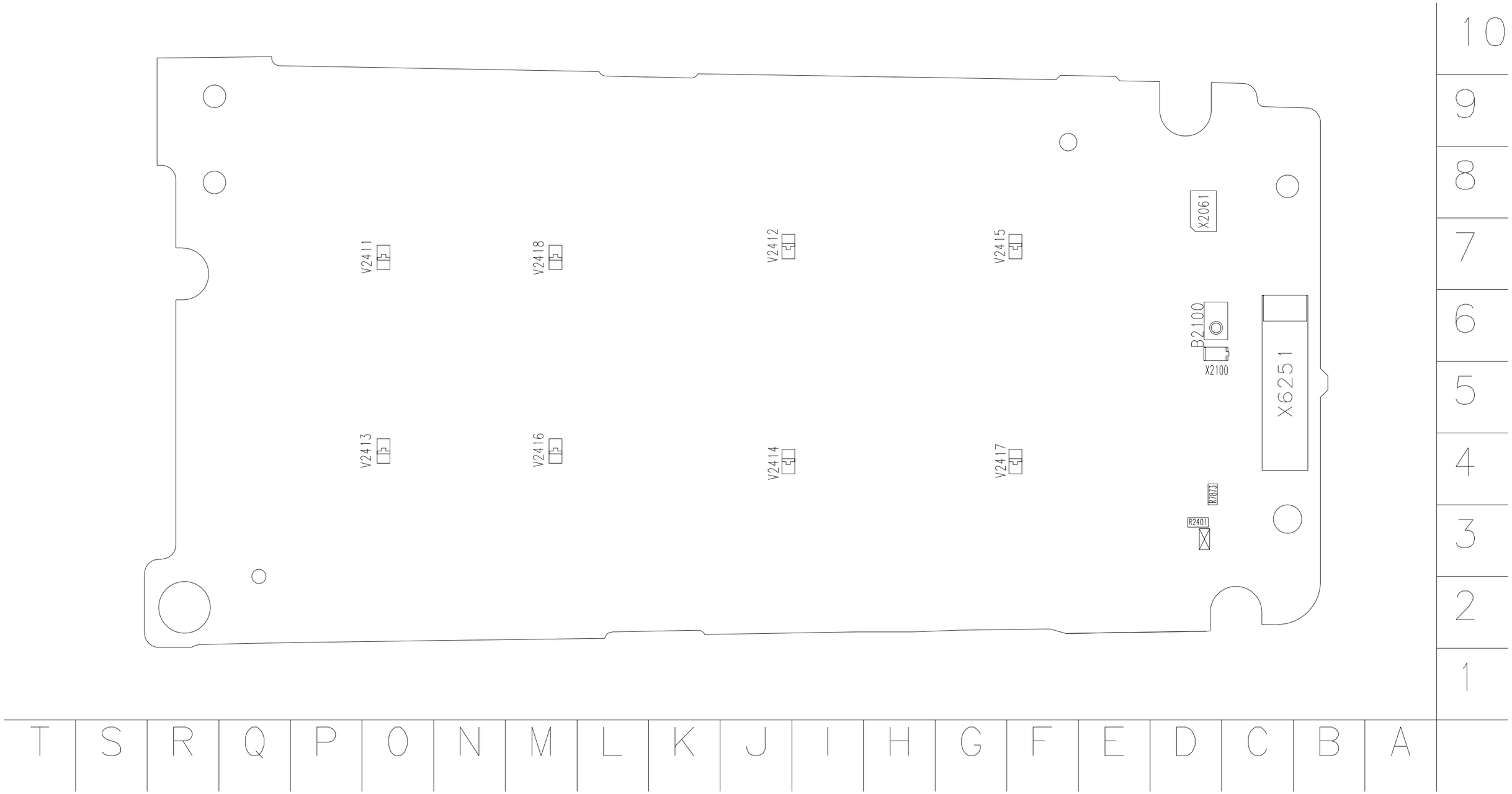
V2411
V2418
V2412
V2415
X2061
B2100
X2100
X6251
V2413
V2416
V2414
V2417
R7873
R2401
10
9
8
7
6
5
4
3
2
1
T
S
R
Q
P
O
N
M
L
K
J
I
H
G
F
E
D
C
B
A

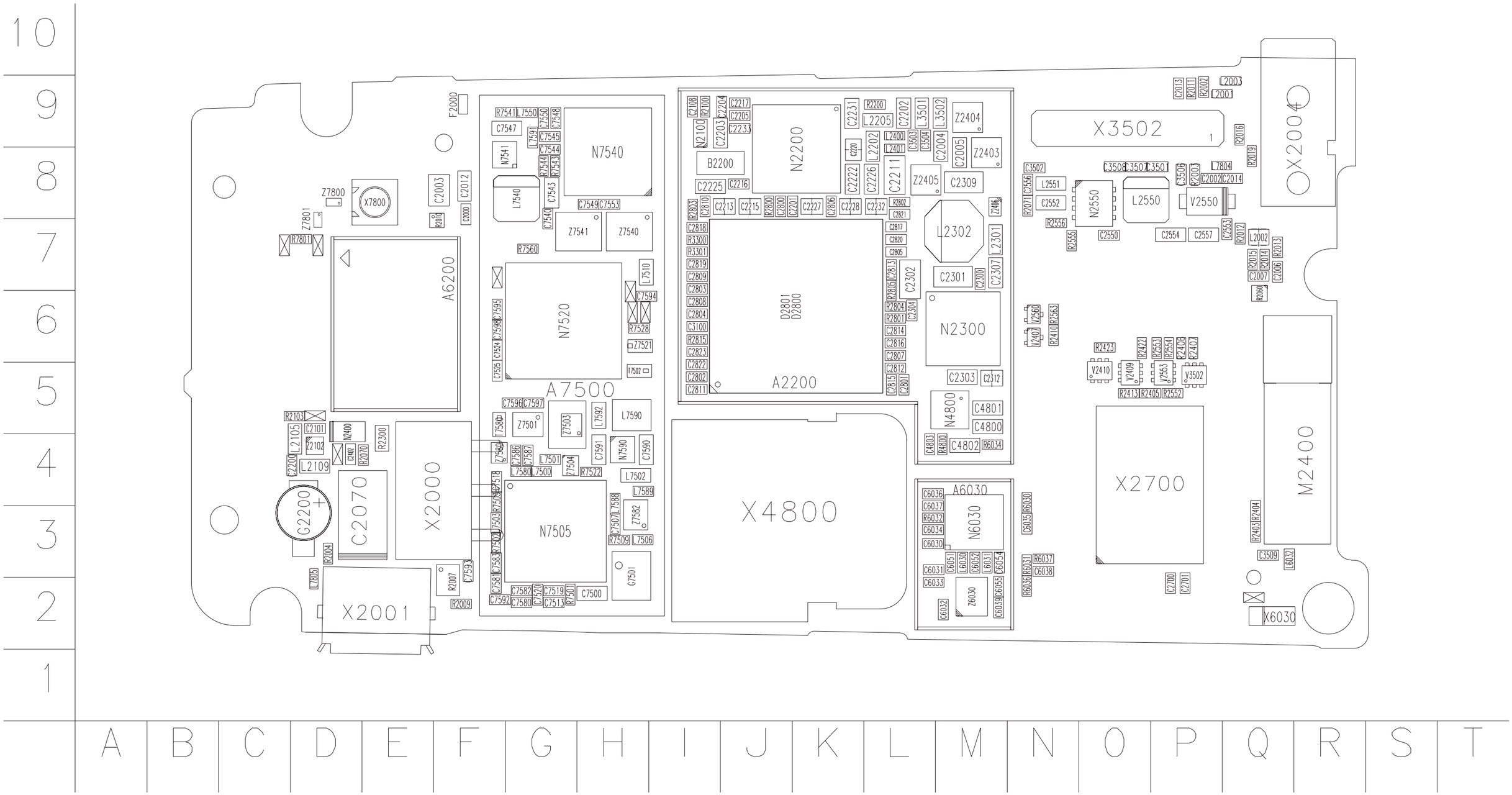

RM-270_2ab_09b_asmdrw_t.pdf

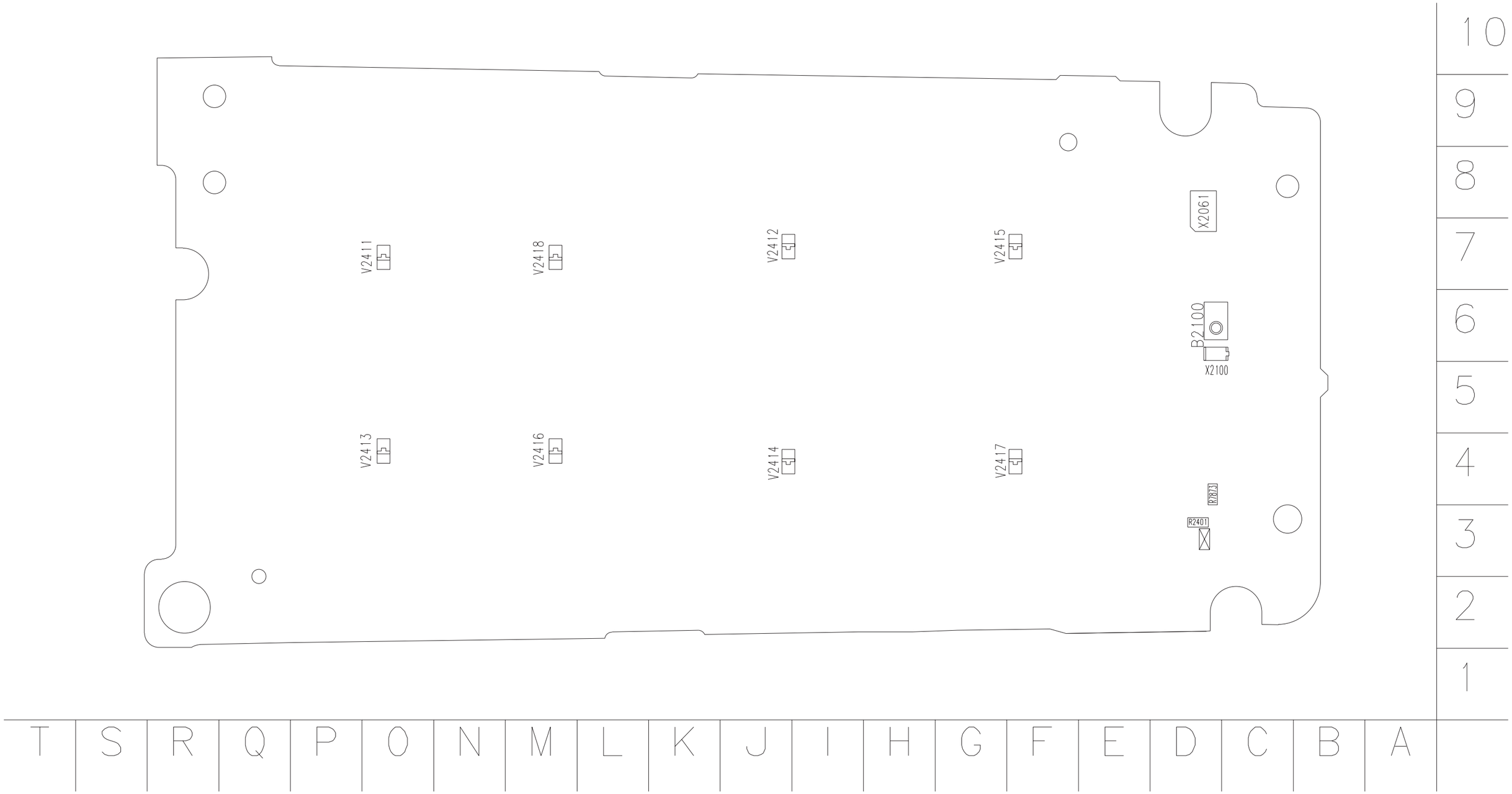
V2411
V2418
V2412
V2415
X2061
B2100
X2100
V2413
V2416
V2414
V2417
R7873
R2401
10
9
8
7
6
5
4
3
2
1
T
S
R
Q
P
O
N
M
L
K
J
I
H
G
F
E
D
C
B
A

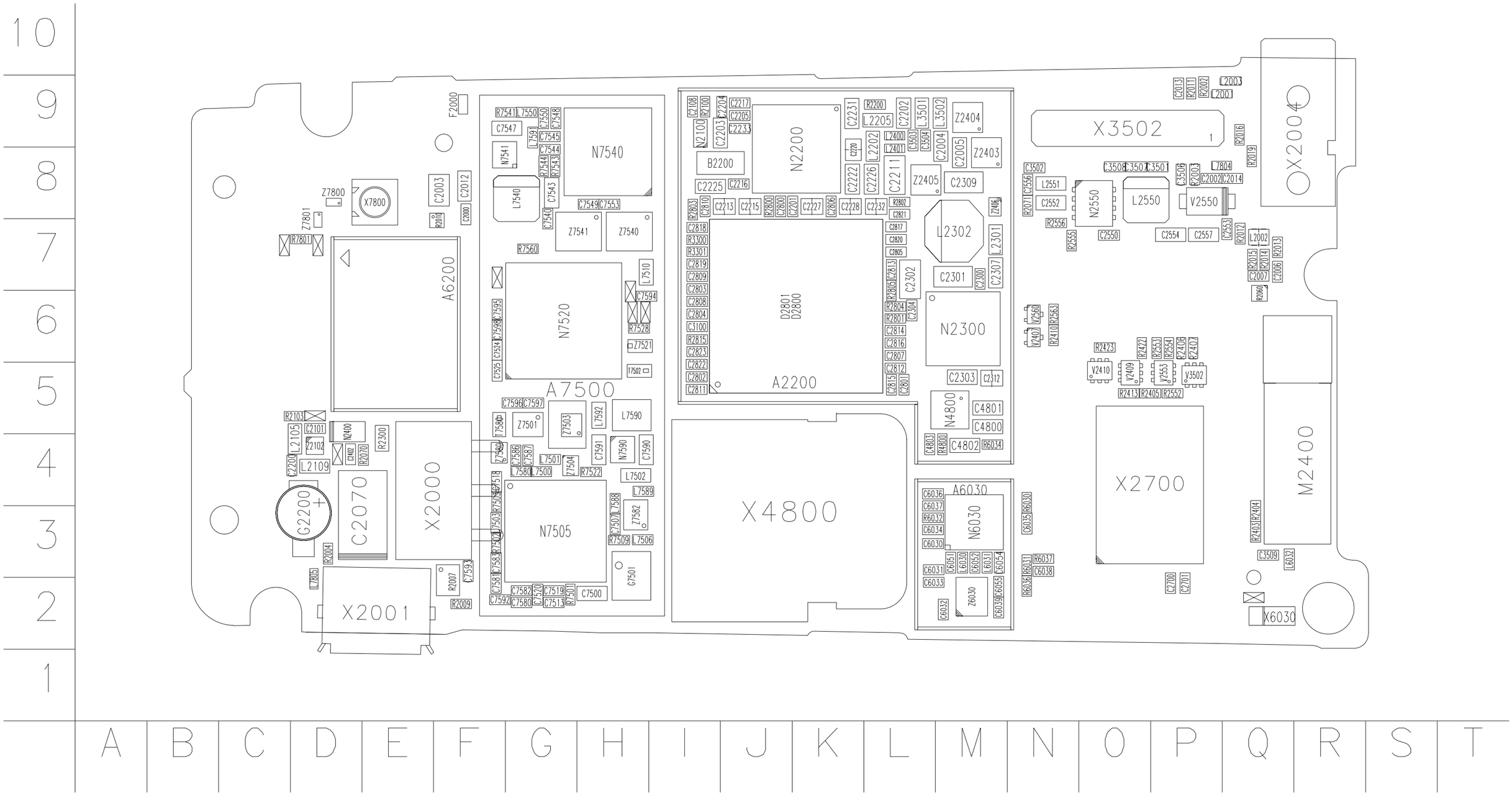

RM-277_2ab_09o_asmdrw_t.pdf

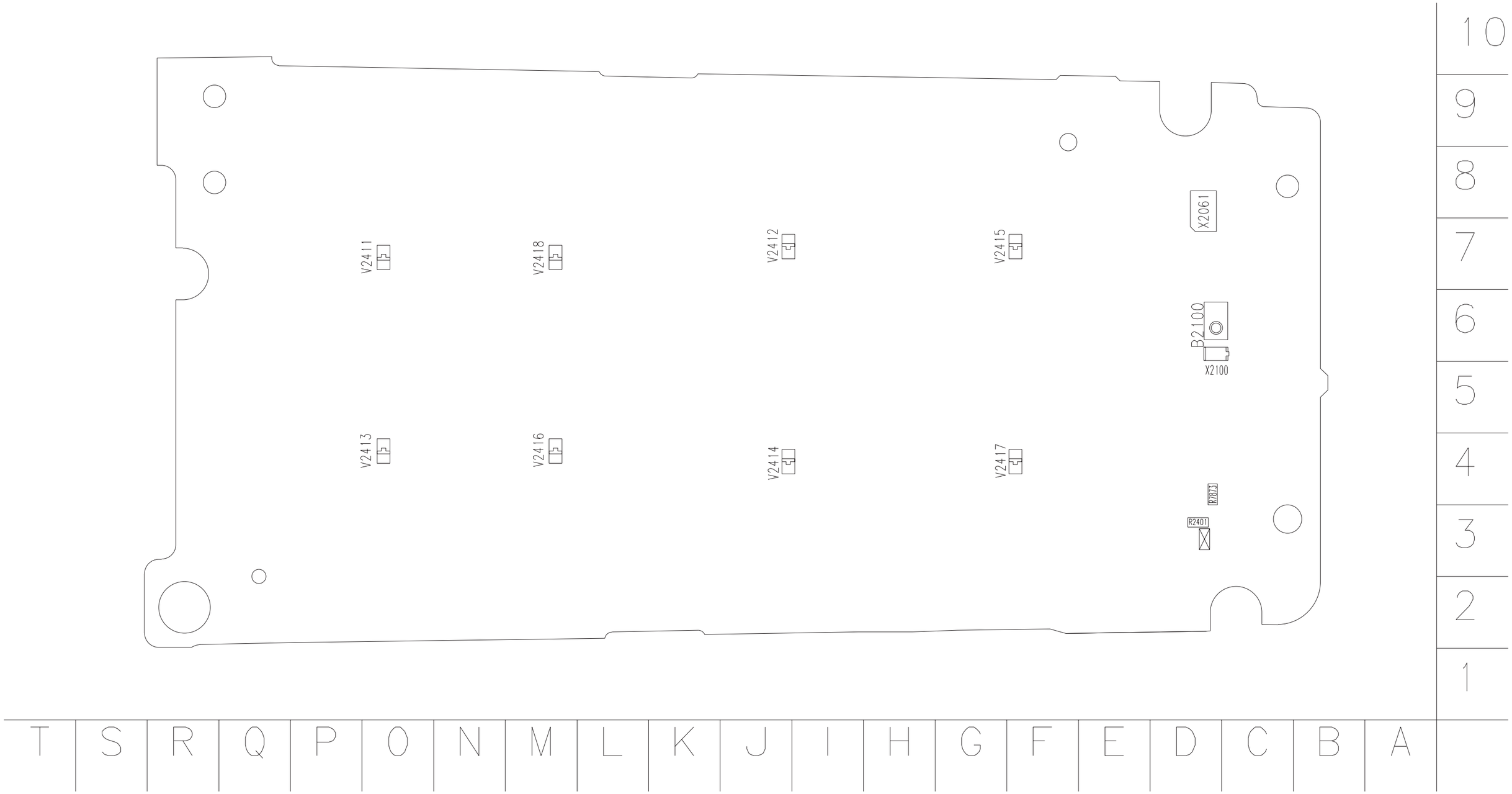
V2411
V2418
V2412
V2415
X2061
B2100
X2100
V2413
V2416
V2414
V2417
R7873
R2401
10
9
8
7
6
5
4
3
2
1
T
S
R
Q
P
O
N
M
L
K
J
I
H
G
F
E
D
C
B
A

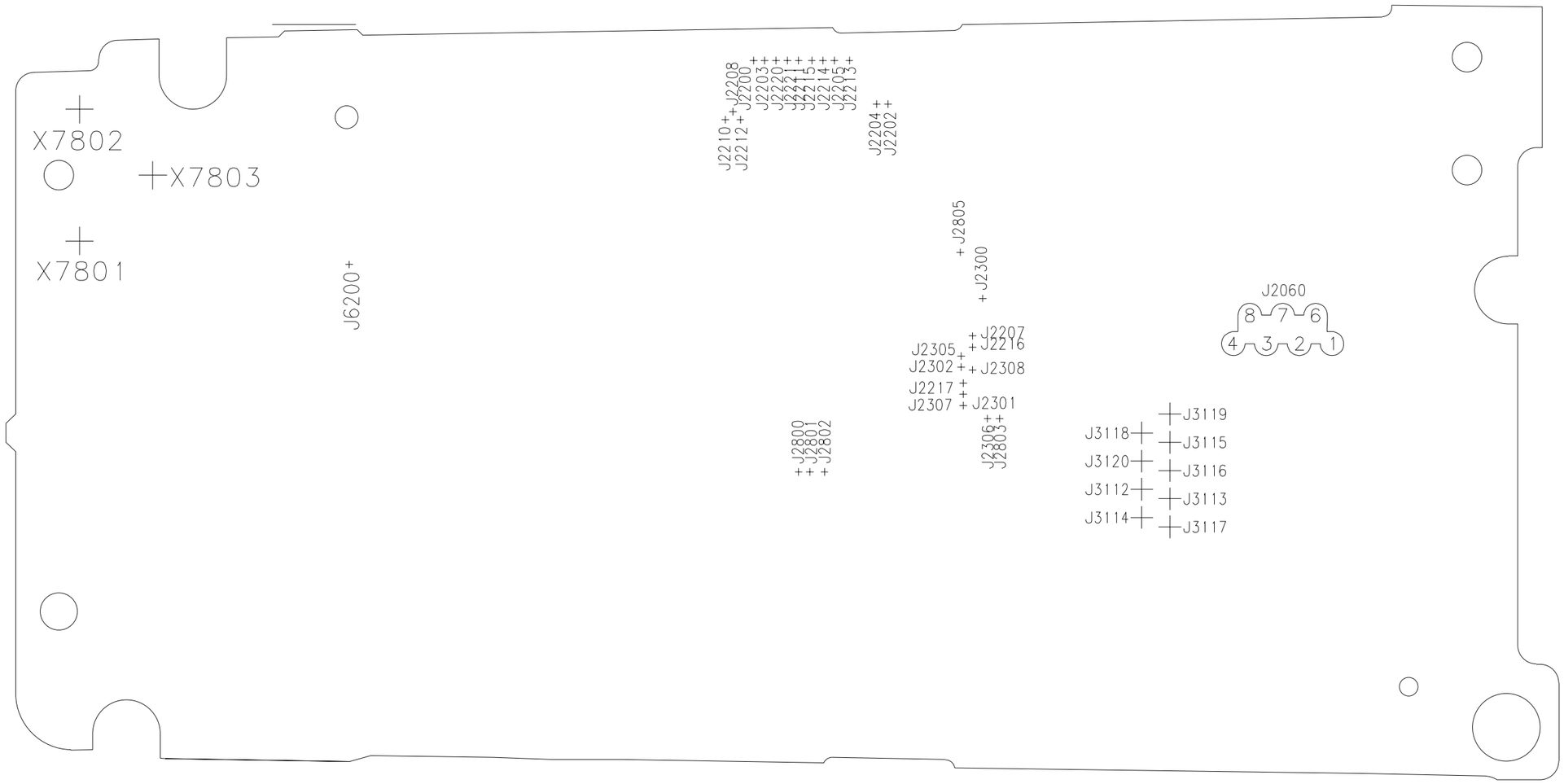
X7802
X7803
X7801
J6200
J2210
J2212
J2208
J2200
J2203
J2220
J2221
J2211
J2215
J2214
J2205
J2213
J2204
J2202
J2805
J2300
J2060
8 7 6
4 3 2 1
J2207
J2216
J2305
J2302
J2308
J2217
J2307
J2301
J2306
J2803
J2800
J2801
J2802
J3119
J3118
J3115
J3120
J3116
J3112
J3113
J3114
J3117

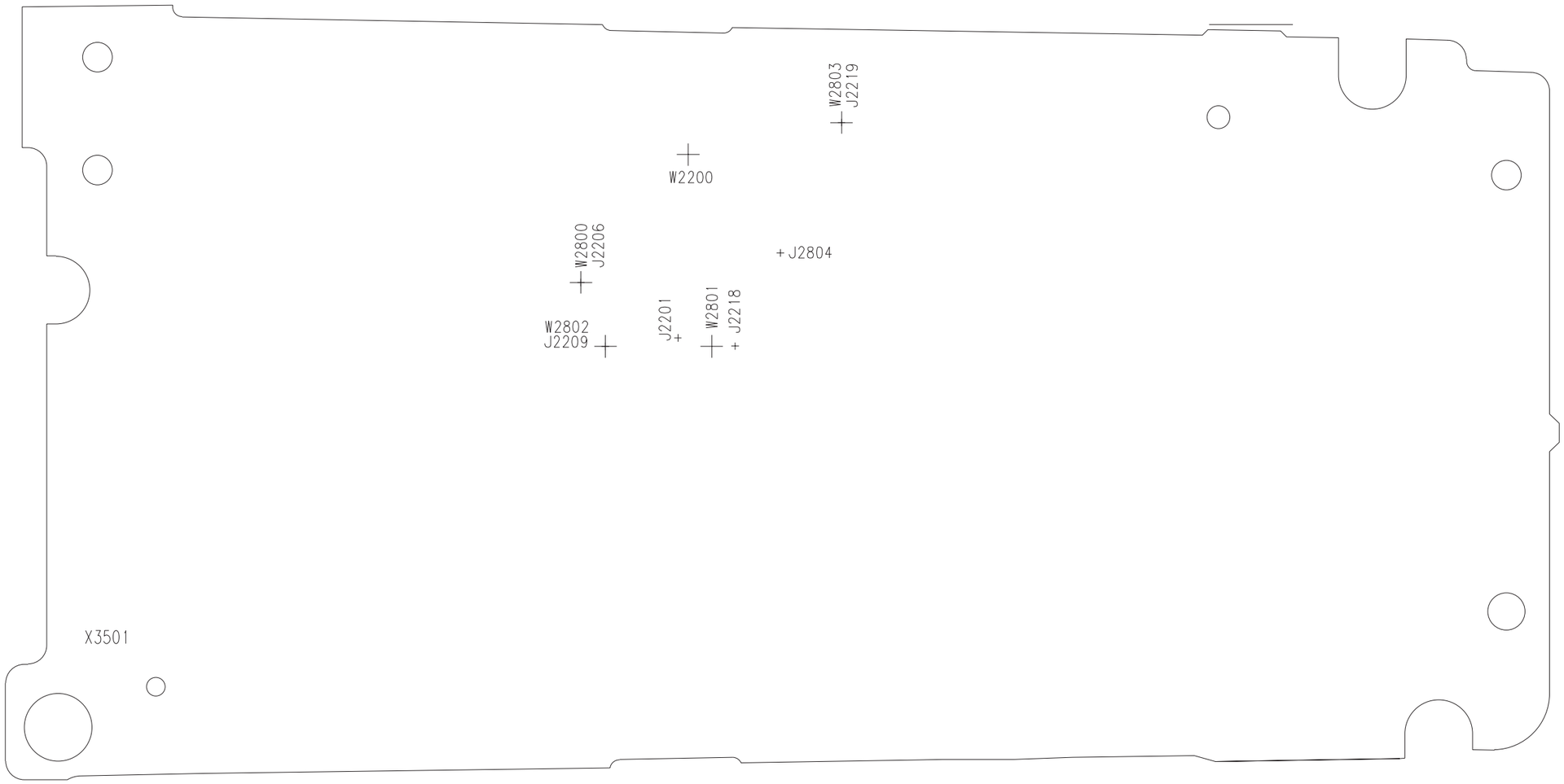
W2803
J2219
W2200
W2800
J2206
J2804
J2201
W2801
J2218
W2802
J2209
X3501

Upper PWB

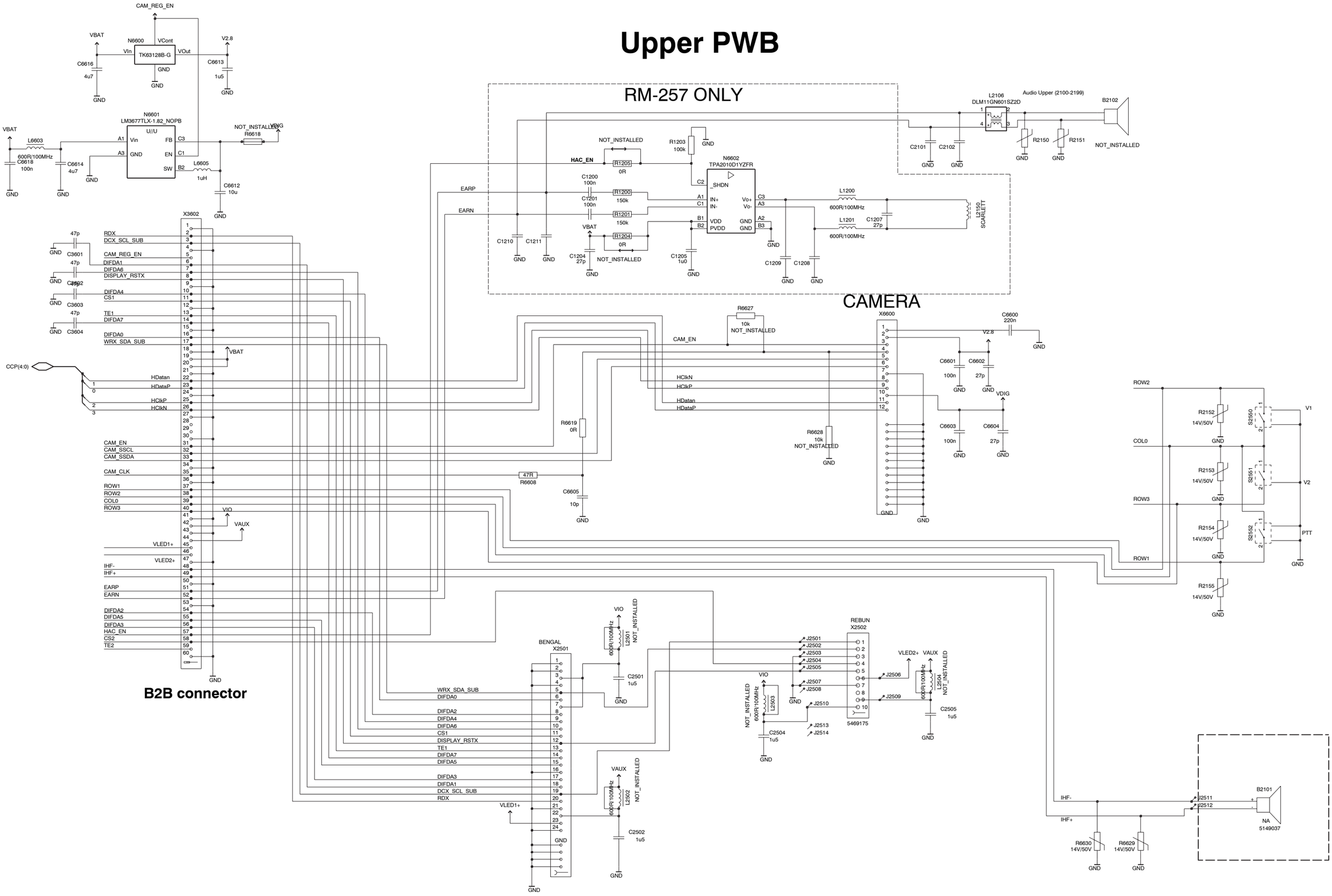
RM-257 ONLY
CAMERA
B2B connector
N6600
TK63128B-G
N6601
LM3677TLX-1.82_NOPB
N6602
TPA2010D1YZFR
X3602
X6600
X2501
BENGAL
X2502
REBUN
5469175
B2102
B2101
NA
5149037
L2150
SCARLETT
Audio Upper (2100-2199)
CAM_REG_EN
VBAT
V2.8
VDIG
VIO
VAUX
VLED1+
VLED2+
CCP(4:0)
HAC_EN
EARP
EARN
IHF-
IHF+
PTT
ROW1
ROW2
ROW3
COL0
V1
V2
NOT_INSTALLED

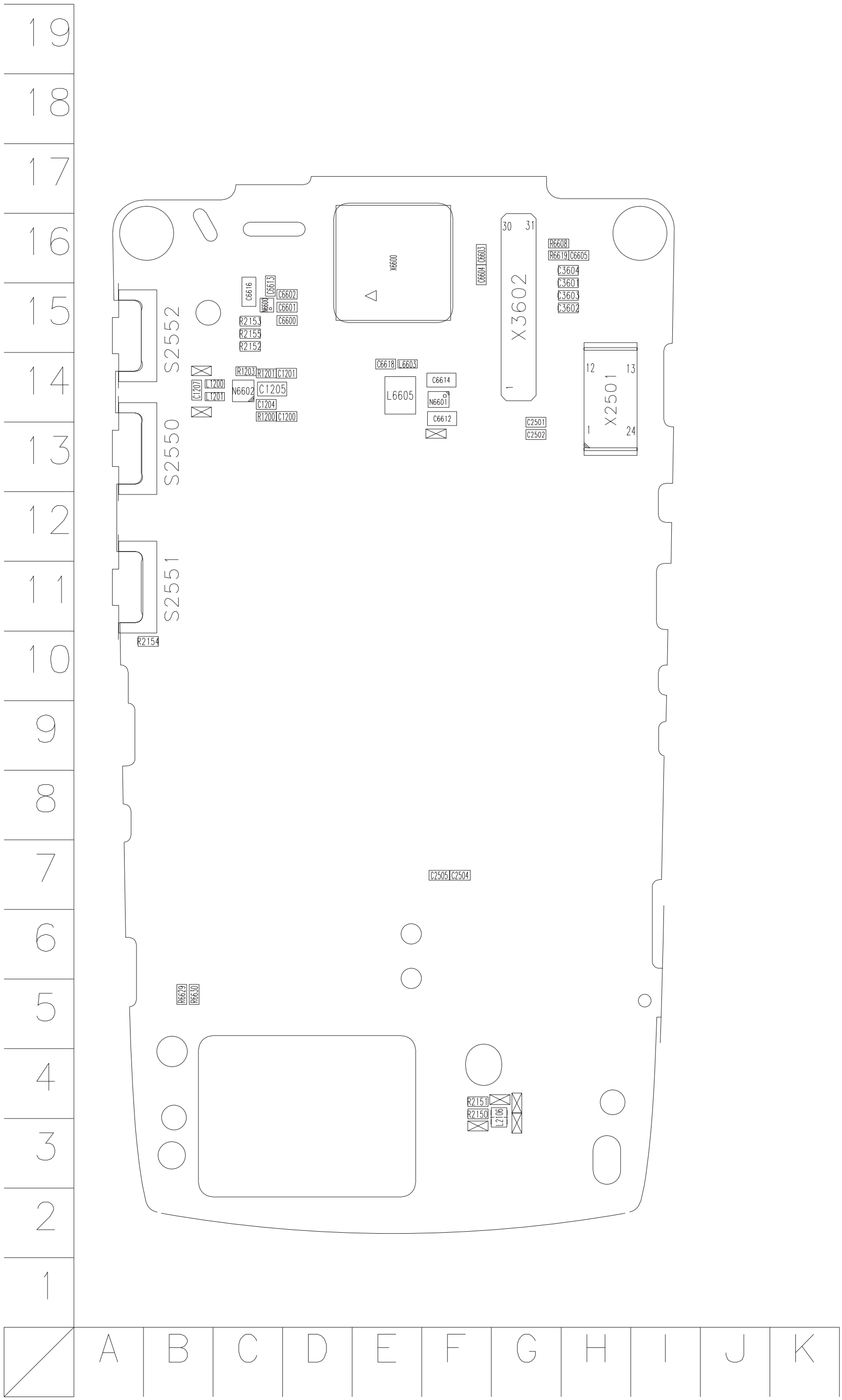

RM-257_2cs_06s_asmdrw_t.pdf

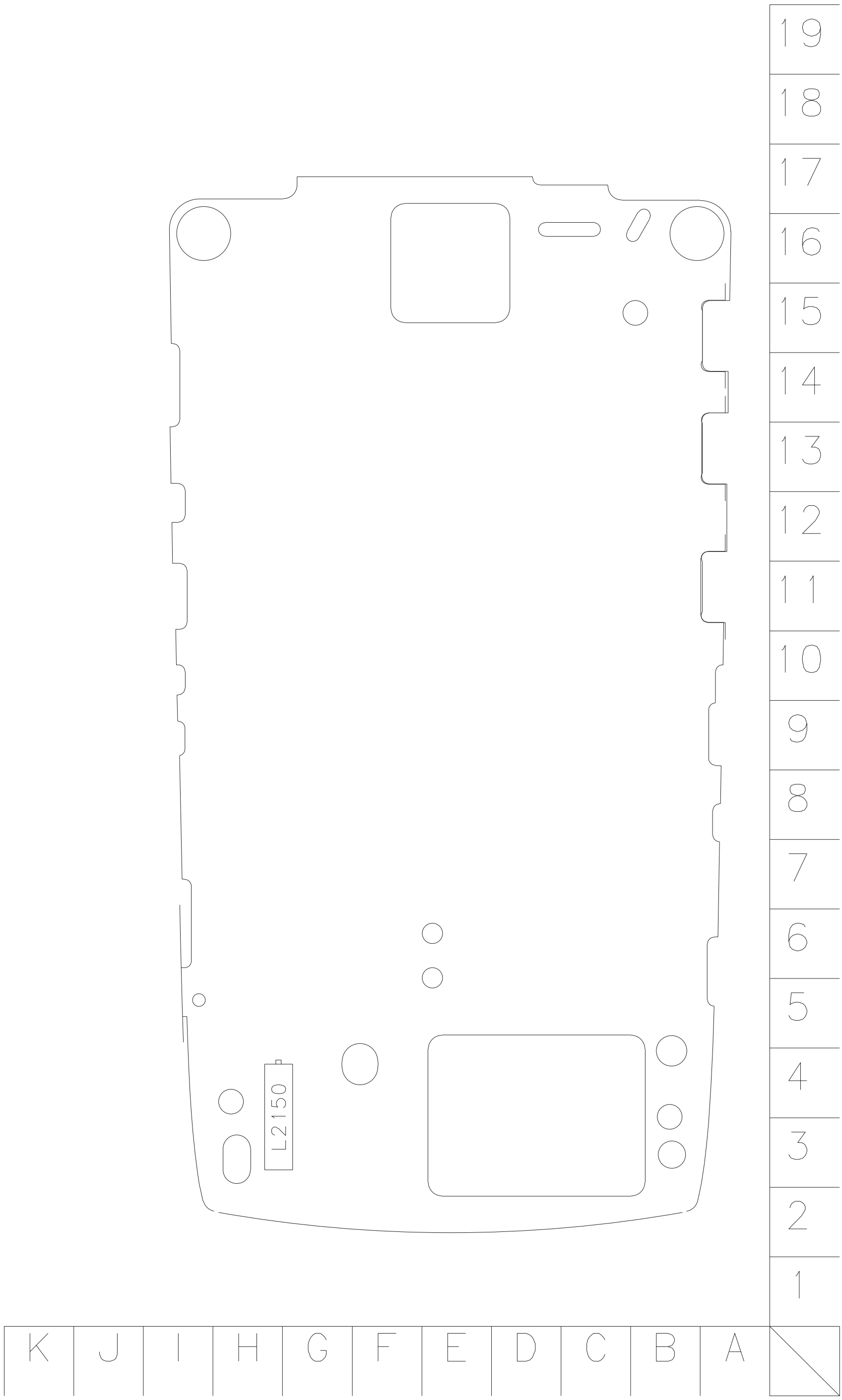
L2150
19
18
17
16
15
14
13
12
11
10
9
8
7
6
5
4
3
2
1
K
J
I
H
G
F
E
D
C
B
A

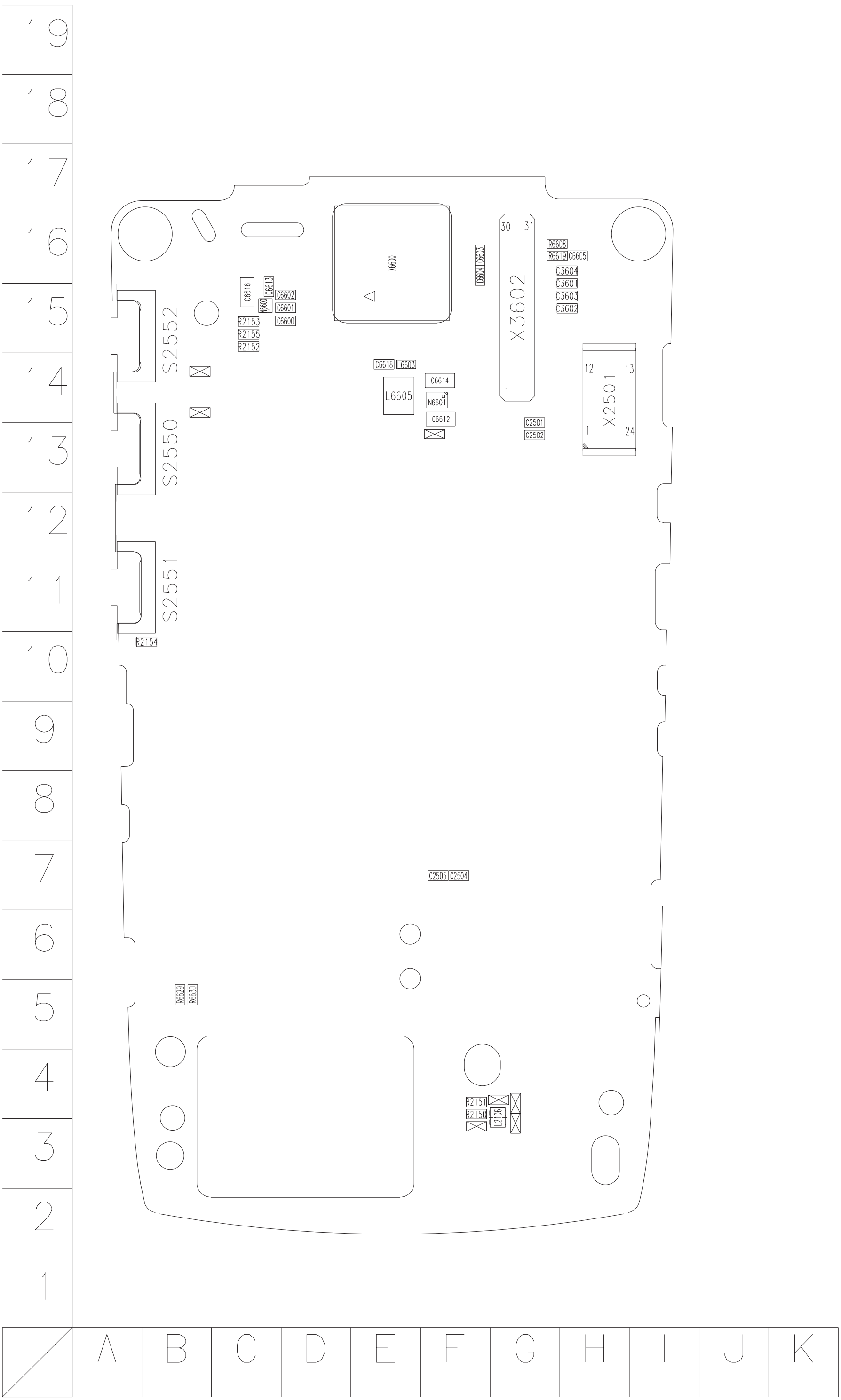

RM-270_2cs_06b_asmdrw_t.pdf

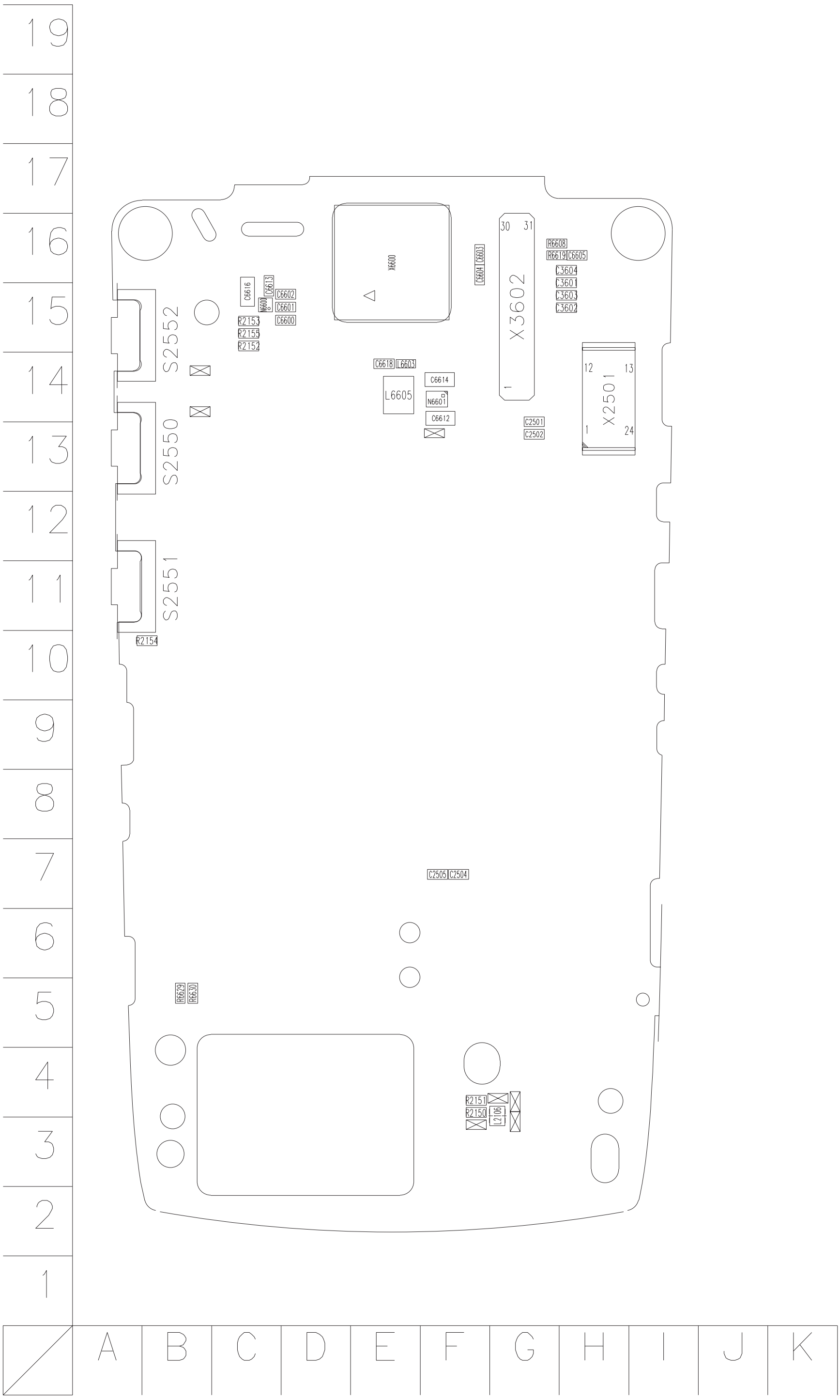

RM-277_2cs_06o_asmdrw_t.pdf