Nokia Customer Care

Service Manual

RM-497 (Nokia 7020)

Schematics

Part No: (Issue 1)

COMPANY CONFIDENTIAL

NOKIA
Care

Copyright © 2010 Nokia. All rights reserved.

Nokia 7020 Service Manual Structure

1 RM-497 schematics

Copyright © 2010 Nokia. All rights reserved.

(This page left intentionally blank.)

Copyright © 2010 Nokia. All rights reserved.

1 — RM-497 schematics

Copyright © 2010 Nokia. All rights reserved.

(This page left intentionally blank.)

Copyright © 2010 Nokia. All rights reserved.

Table of Contents

Top Level 1–4
Core HW Engine 1–5
Reuse Top 1–6
Reuse RF 1–7
Reuse PMU 1–8
Reuse Juno 1–9
Reuse Memory 1–10
Broadcom MUX HW130 1–11
Core HW Connectors 1–12
Core HW Audio 1–13
UI Interface 1–14
LPRF 1–15
BTHFMTXRDS3.0b 2X2 1–16

Copyright © 2010 Nokia. All rights reserved.

Top Level

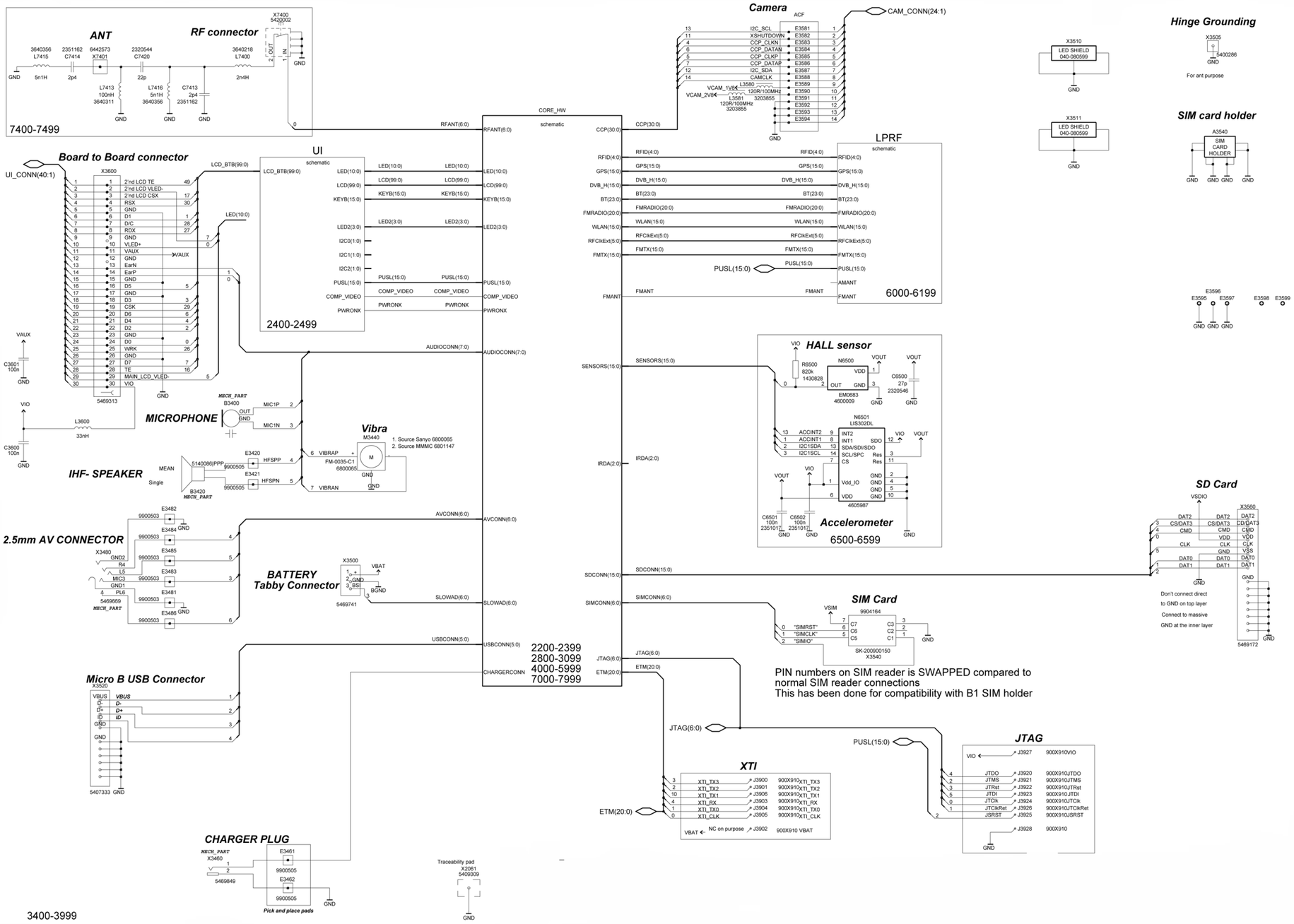

COMPANY CONFIDENTIAL
Copyright © 2010 Nokia. All rights reserved.

Core HW Engine

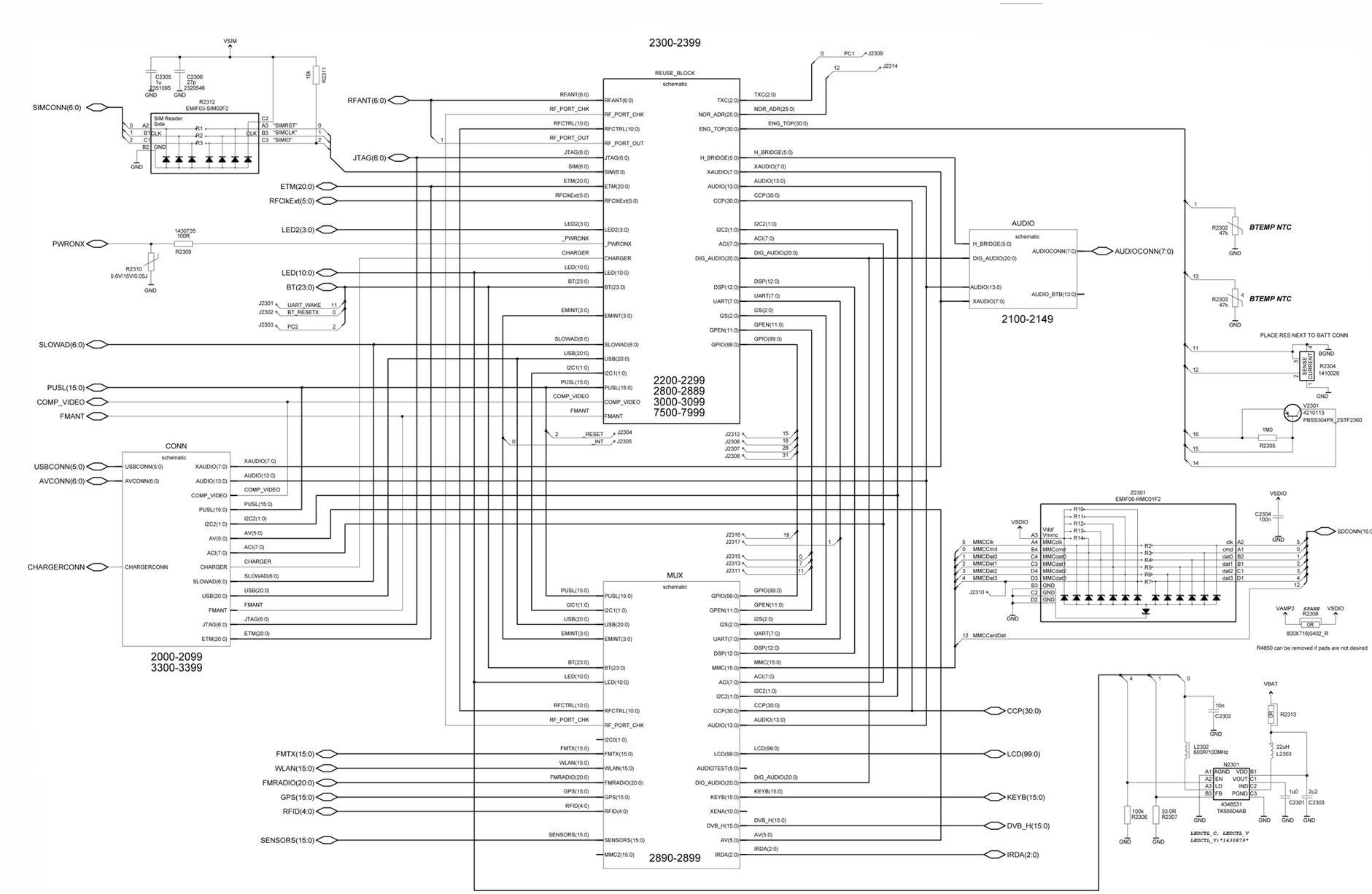

COMPANY CONFIDENTIAL
Copyright © 2010 Nokia. All rights reserved.

Reuse Top

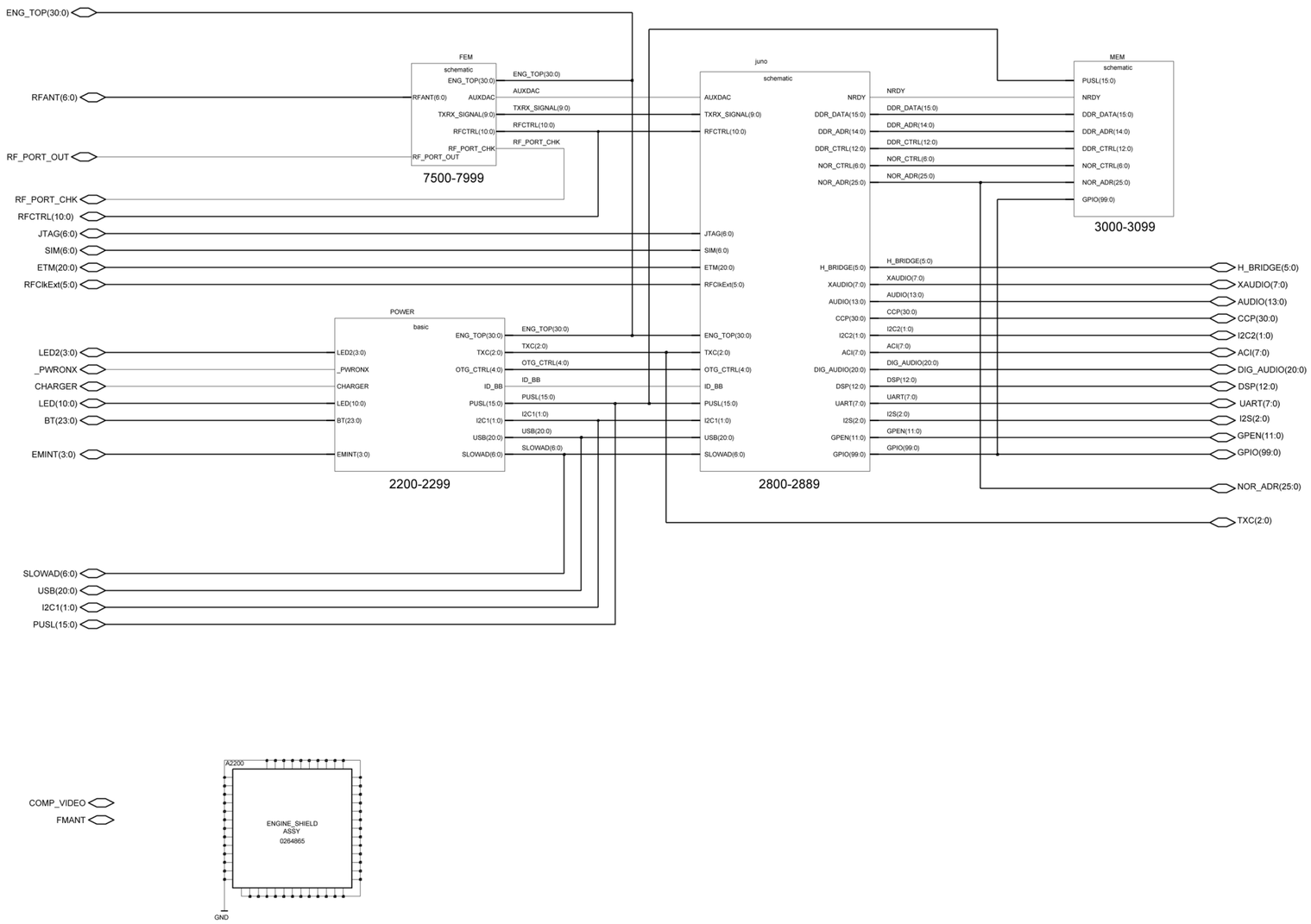

COMPANY CONFIDENTIAL
Copyright © 2010 Nokia. All rights reserved.

Reuse RF

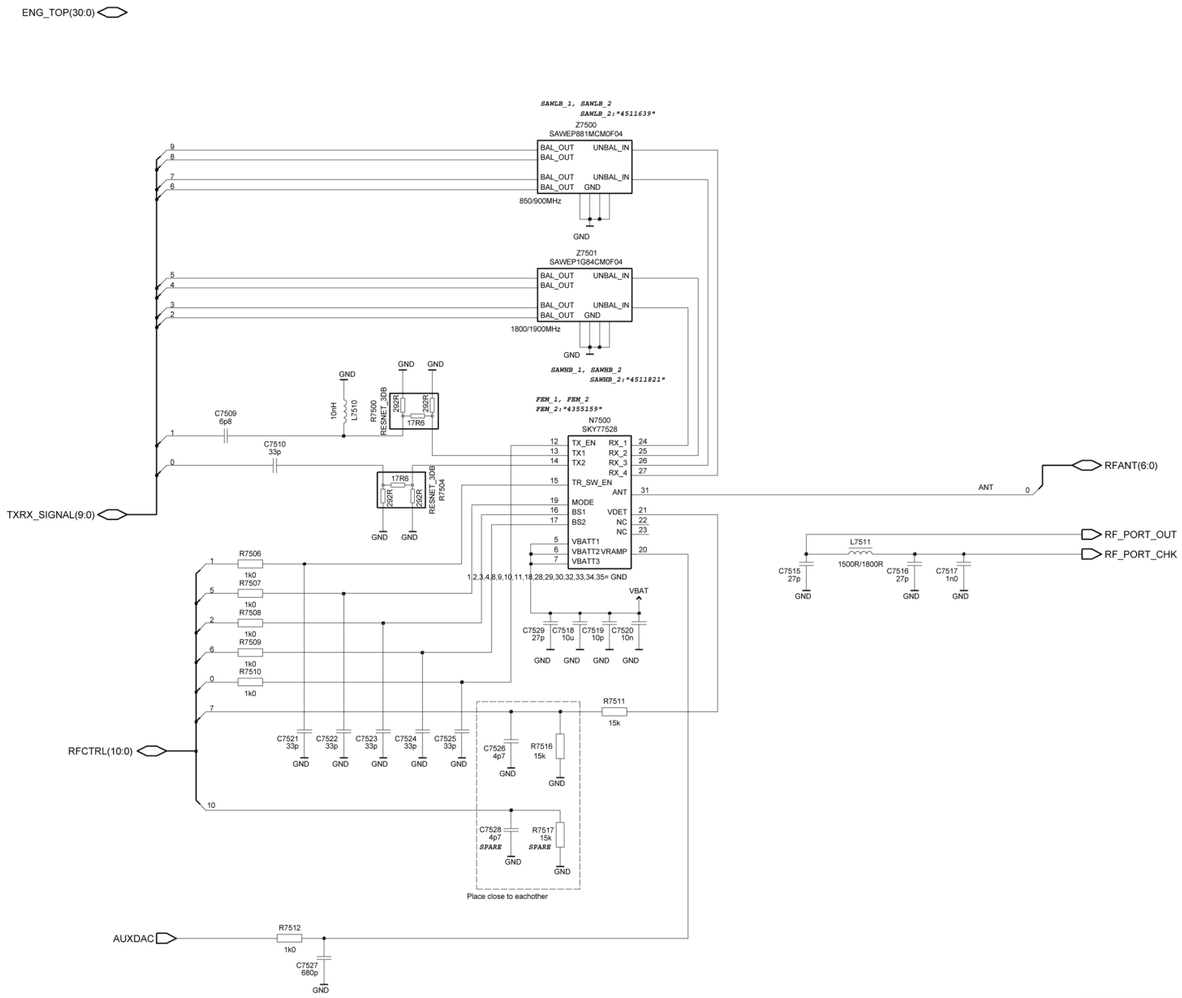

COMPANY CONFIDENTIAL
Copyright © 2010 Nokia. All rights reserved.

Reuse PMU

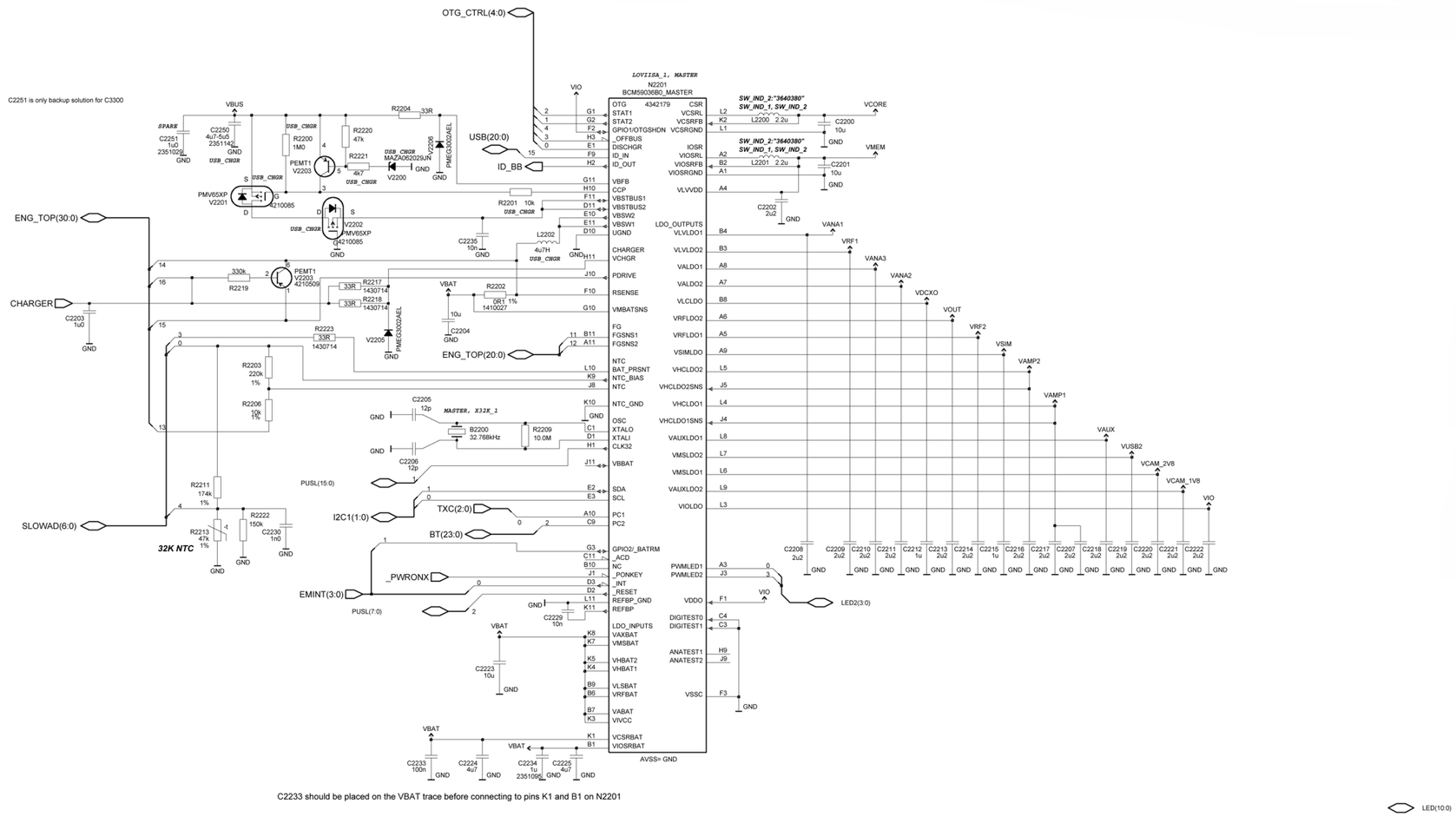

COMPANY CONFIDENTIAL
Copyright © 2010 Nokia. All rights reserved.

Reuse Juno

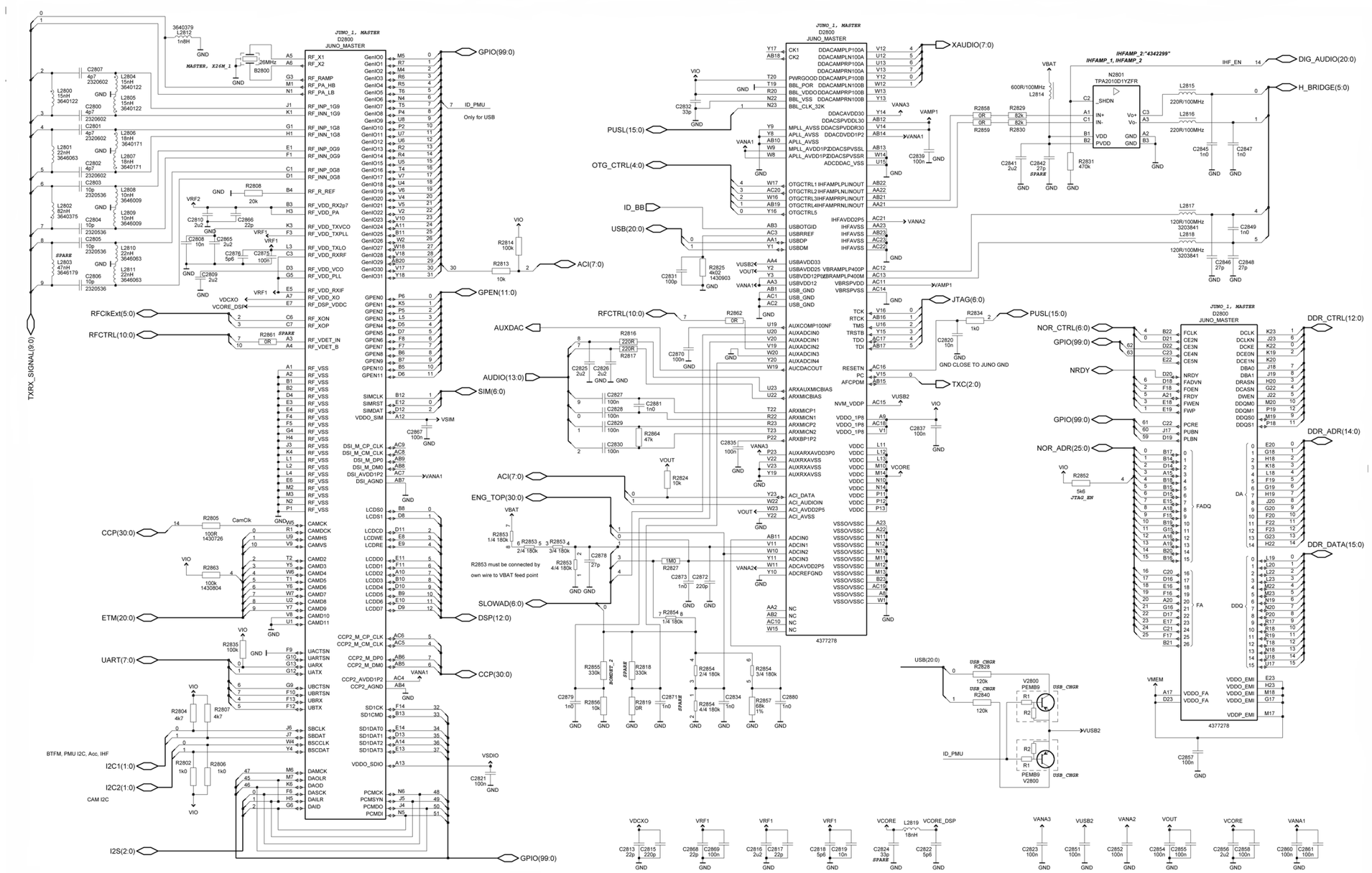

COMPANY CONFIDENTIAL
Copyright © 2010 Nokia. All rights reserved.

Reuse Memory

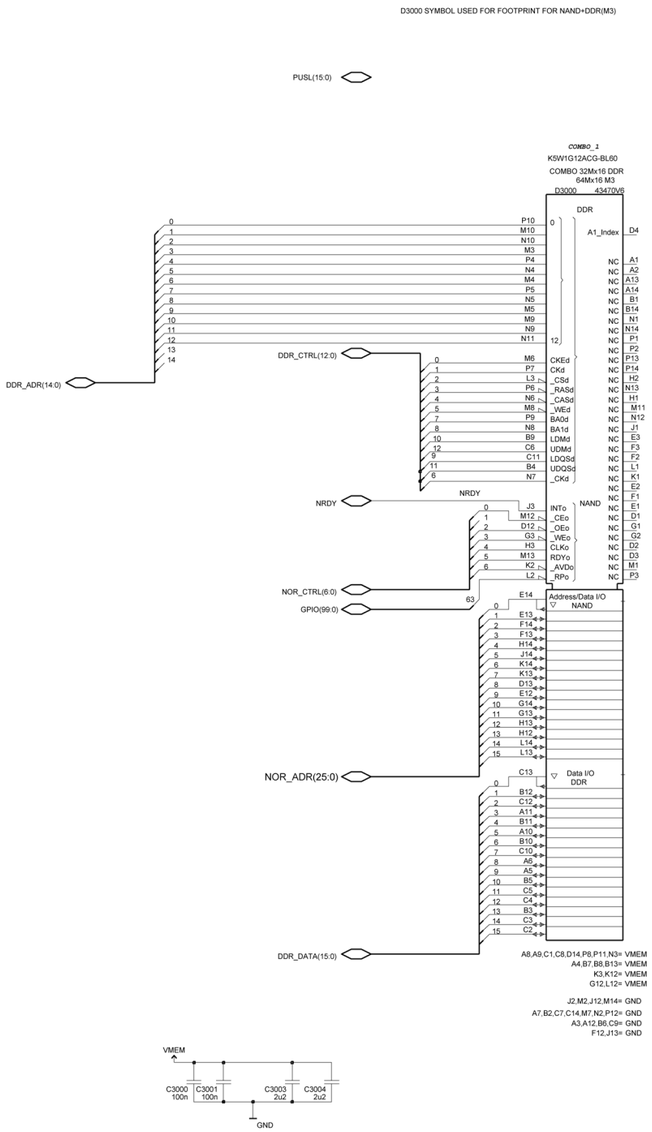

COMPANY CONFIDENTIAL
Copyright © 2010 Nokia. All rights reserved.

Broadcom MUX HW130

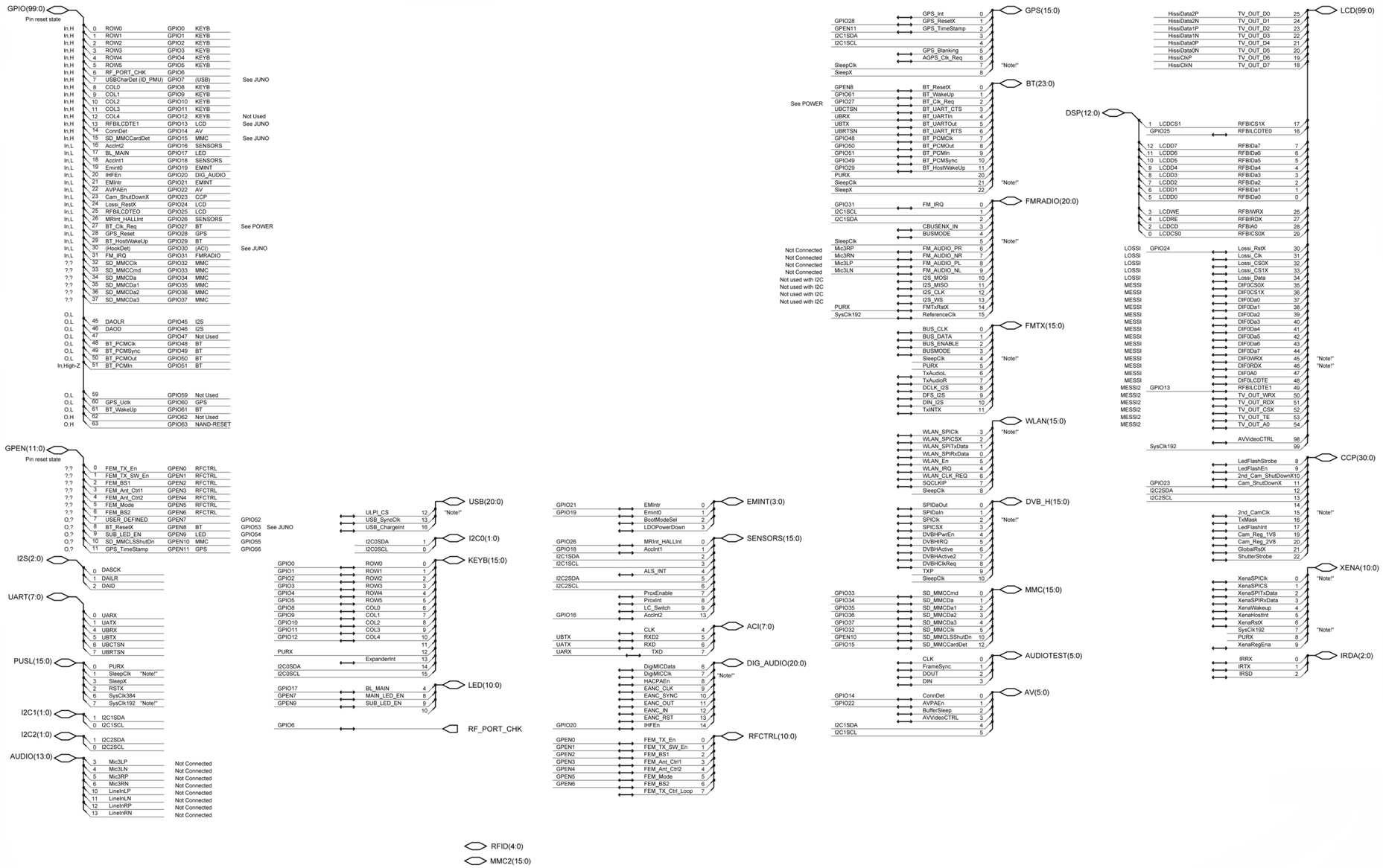

COMPANY CONFIDENTIAL
Copyright © 2010 Nokia. All rights reserved.

Core HW Connectors

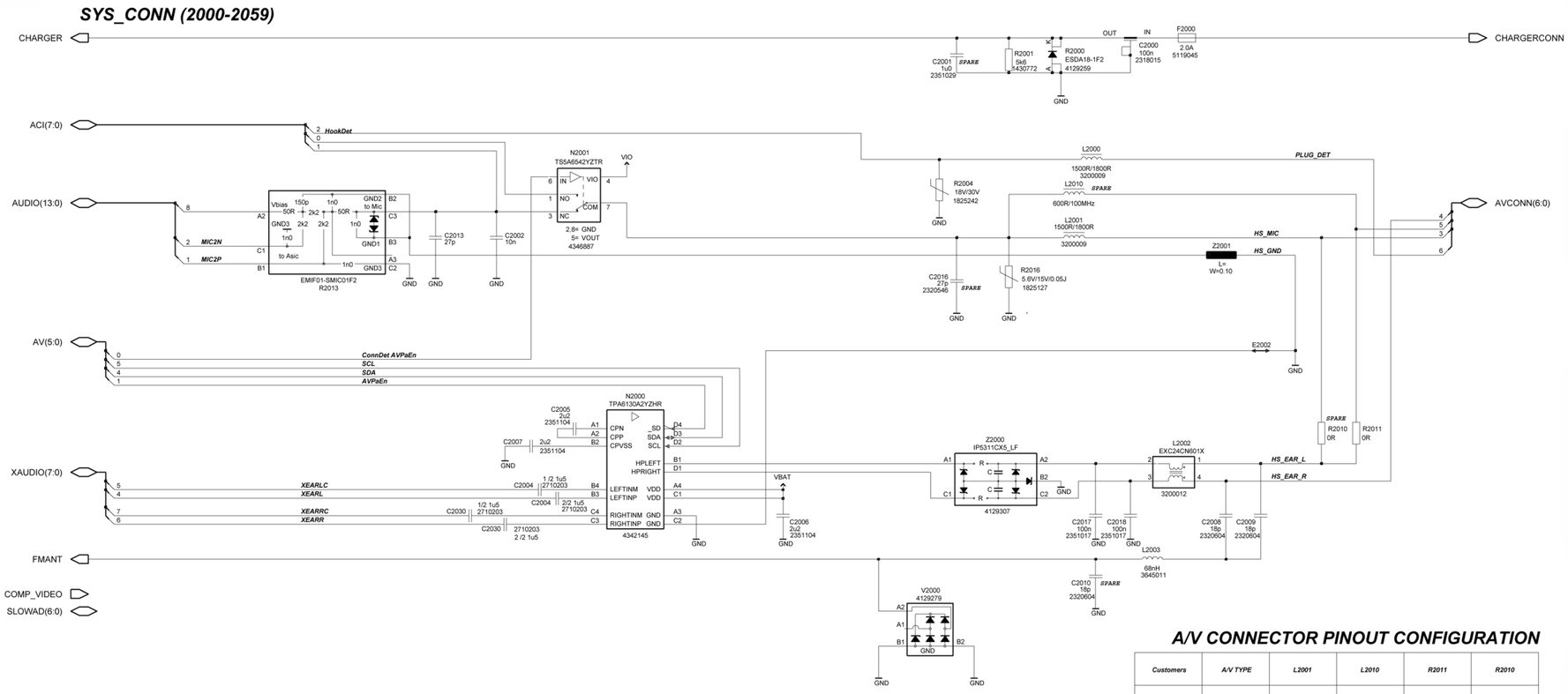

A/V CONNECTOR PINOUT CONFIGURATION

Customers	A/V TYPE	L2001	L2010	R2011	R2010
AT&T	UHJ/2.5mm CDMA	Not Assembled	Assembled	Not Assembled	Assembled
TMO & LTA	NOKIA 2.5mm A/V	Assembled	Not Assembled	Assembled	Not Assembled

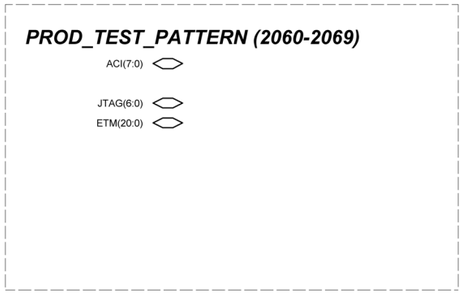

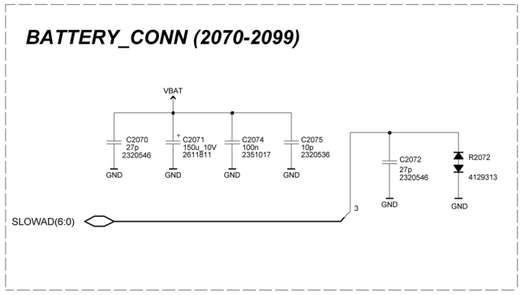

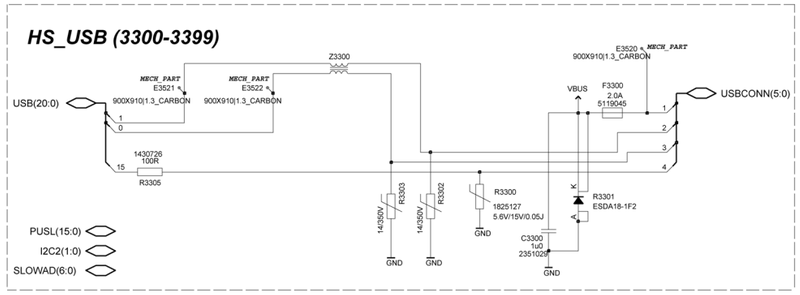

COMPANY CONFIDENTIAL
Copyright © 2010 Nokia. All rights reserved.

Core HW Audio

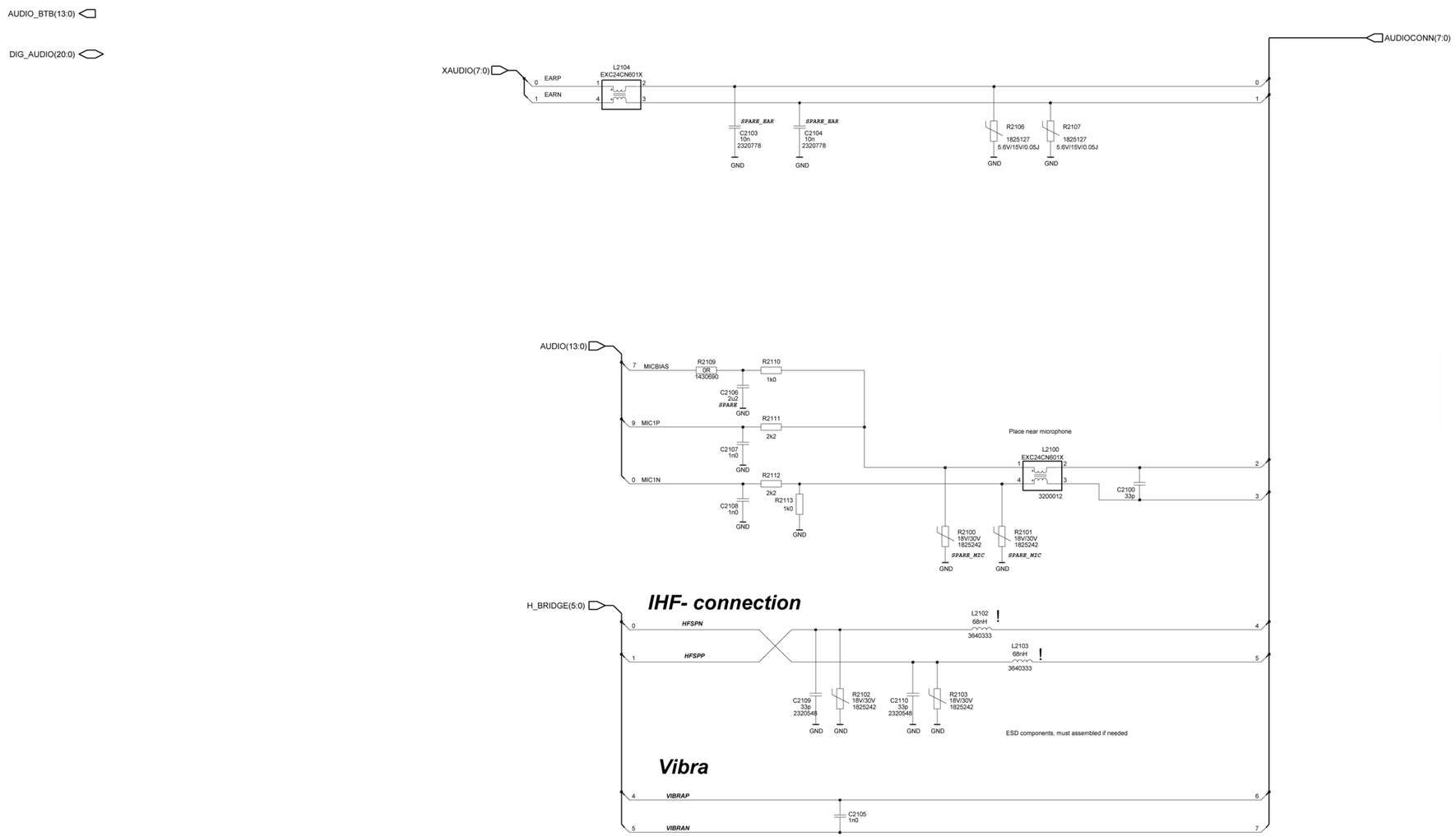

COMPANY CONFIDENTIAL
Copyright © 2010 Nokia. All rights reserved.

UI Interface

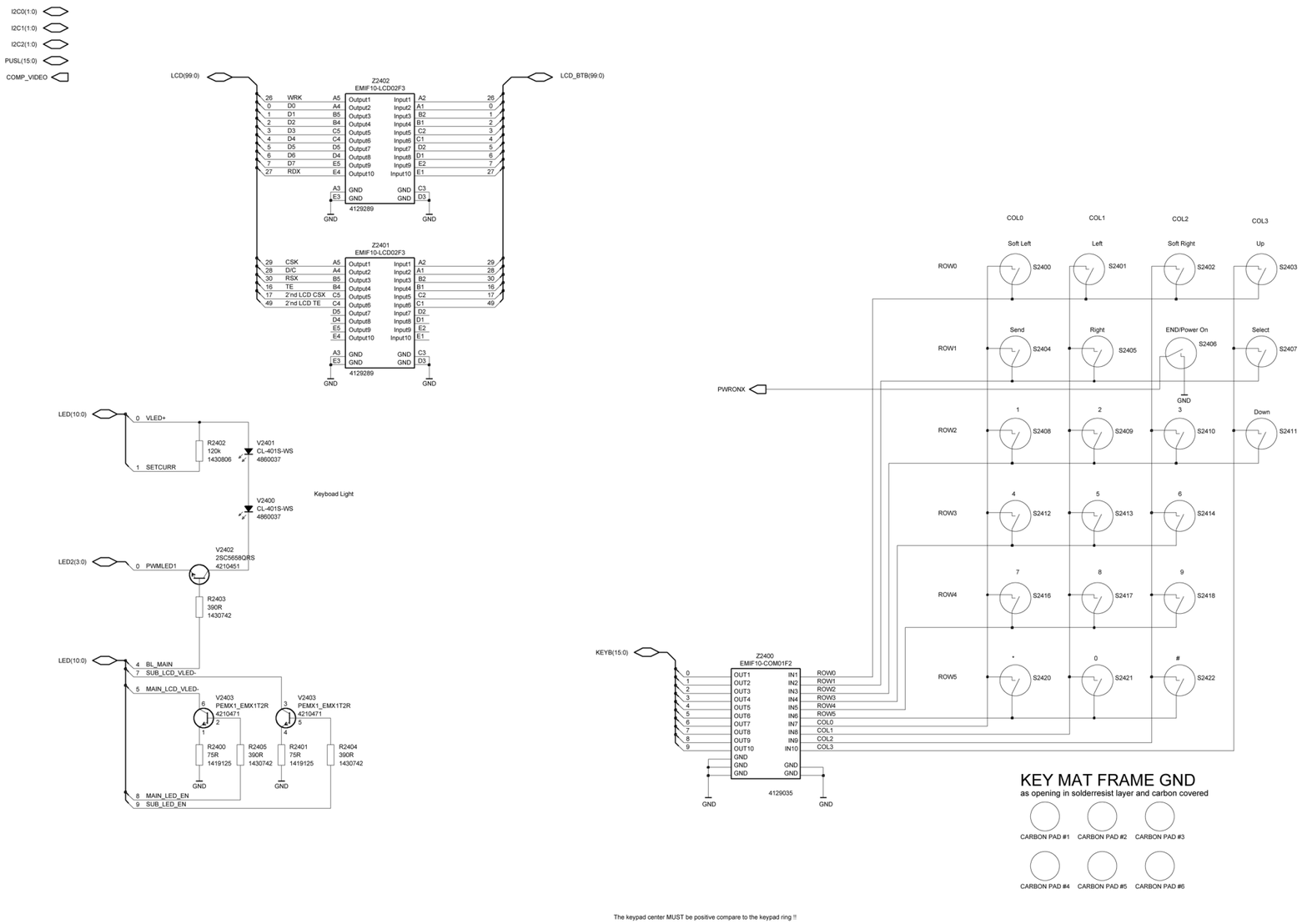

Copyright © 2010 Nokia. All rights reserved.

LPRF

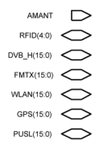

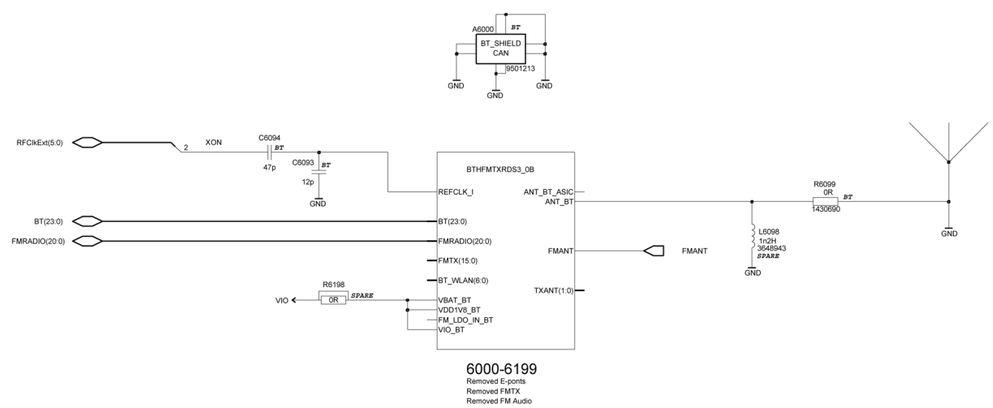

COMPANY CONFIDENTIAL
Copyright © 2010 Nokia. All rights reserved.

BTHFMTXRDS3.0b 2X2

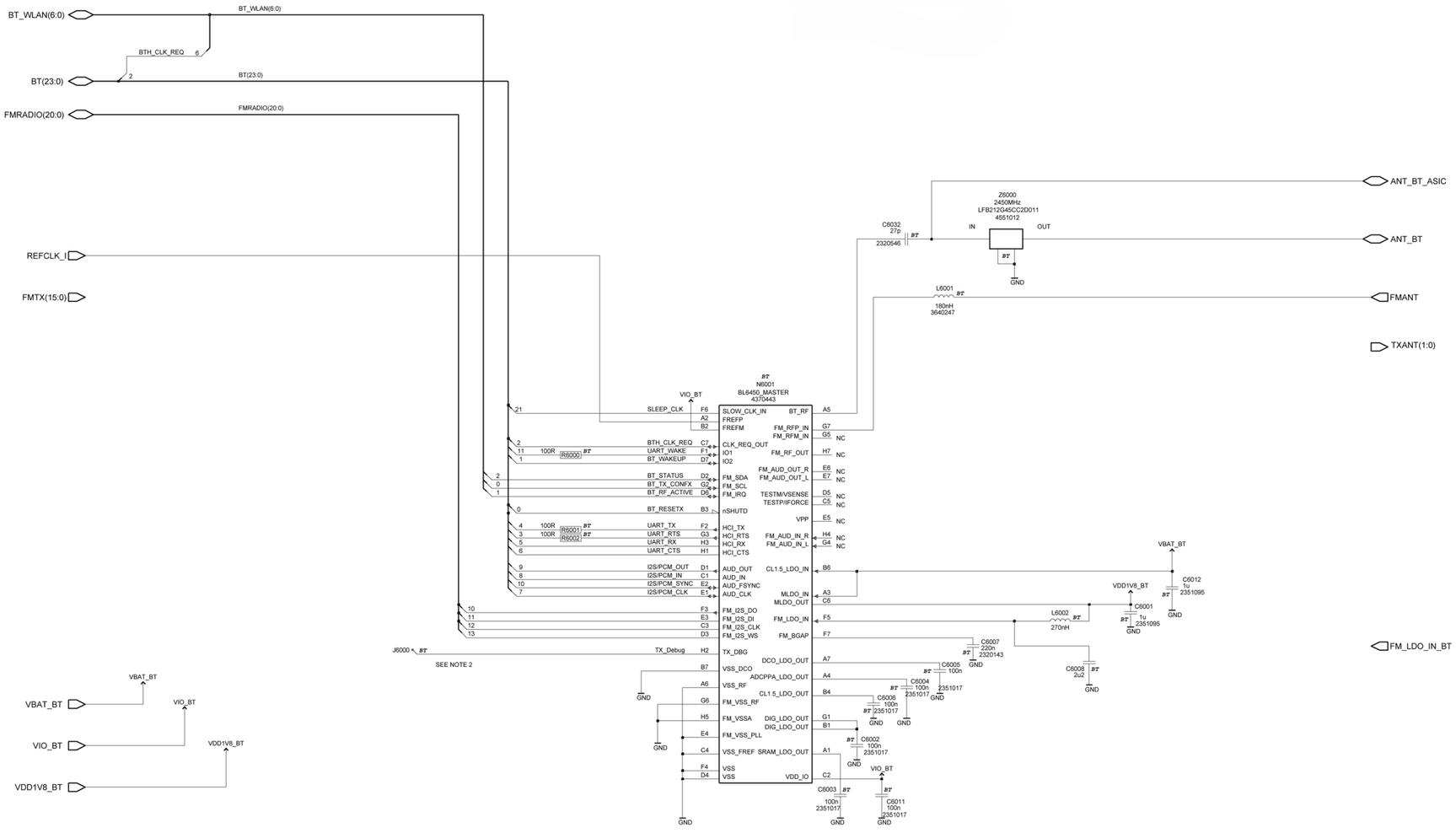

Notes

1. For 3.6V supply voltage operation connect VBAT_BT input to VBAT 3.6V supply and connect VDD1V8_BT to FM_LDO_IN_BT
   For 1.8V supply voltage operation connect VDD1V8_BT and VBAT_BT inputs to 1.8V supply. Leave FM_LDO_IN_BT not connected.
   See application note for full details of voltage options

2. RESISTOR R6021 CAN BE DELETED IF WLAN MODE IS NOT REQUIRED.

3. FOR WLAN MODE, SEE APPLICATION NOTE DOCUMENT.

COMPANY CONFIDENTIAL
Copyright © 2010 Nokia. All rights reserved.