Mainboard PCB Top Level

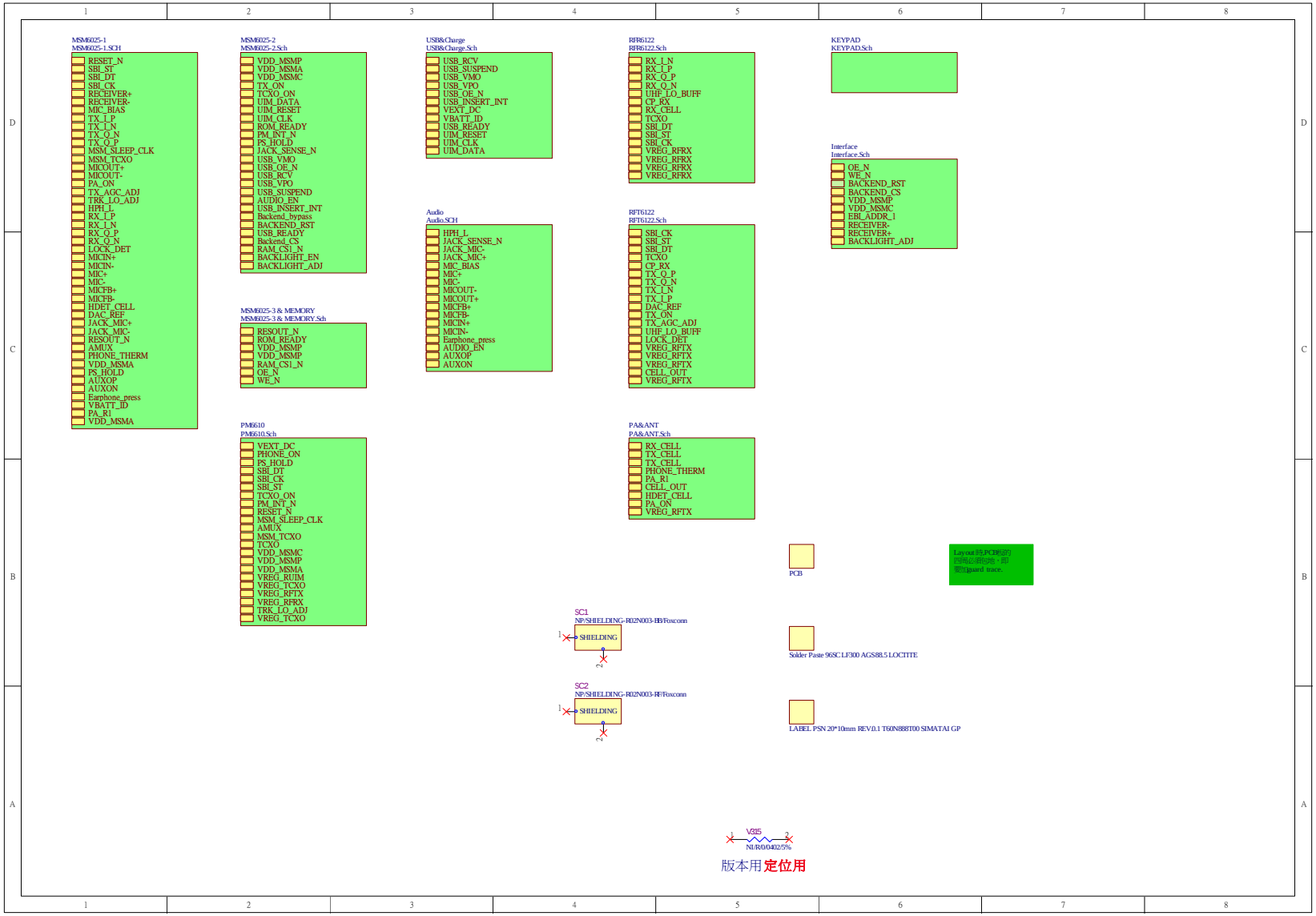

© 2006 Nokia Corporation Company Confidential

MSM6025-1

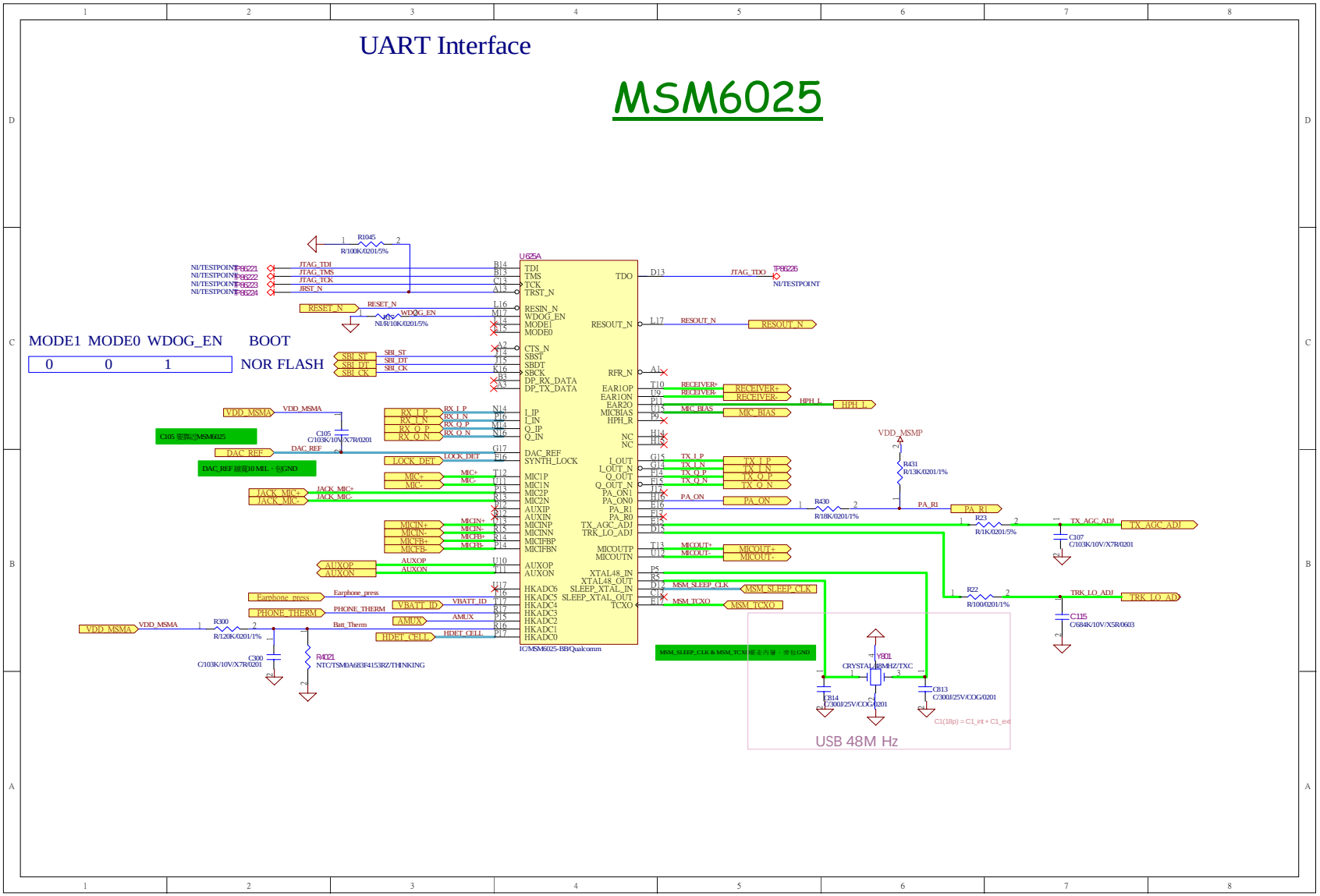

© 2006 Nokia Corporation Company Confidential

MSM6025-2 & Sidekeys

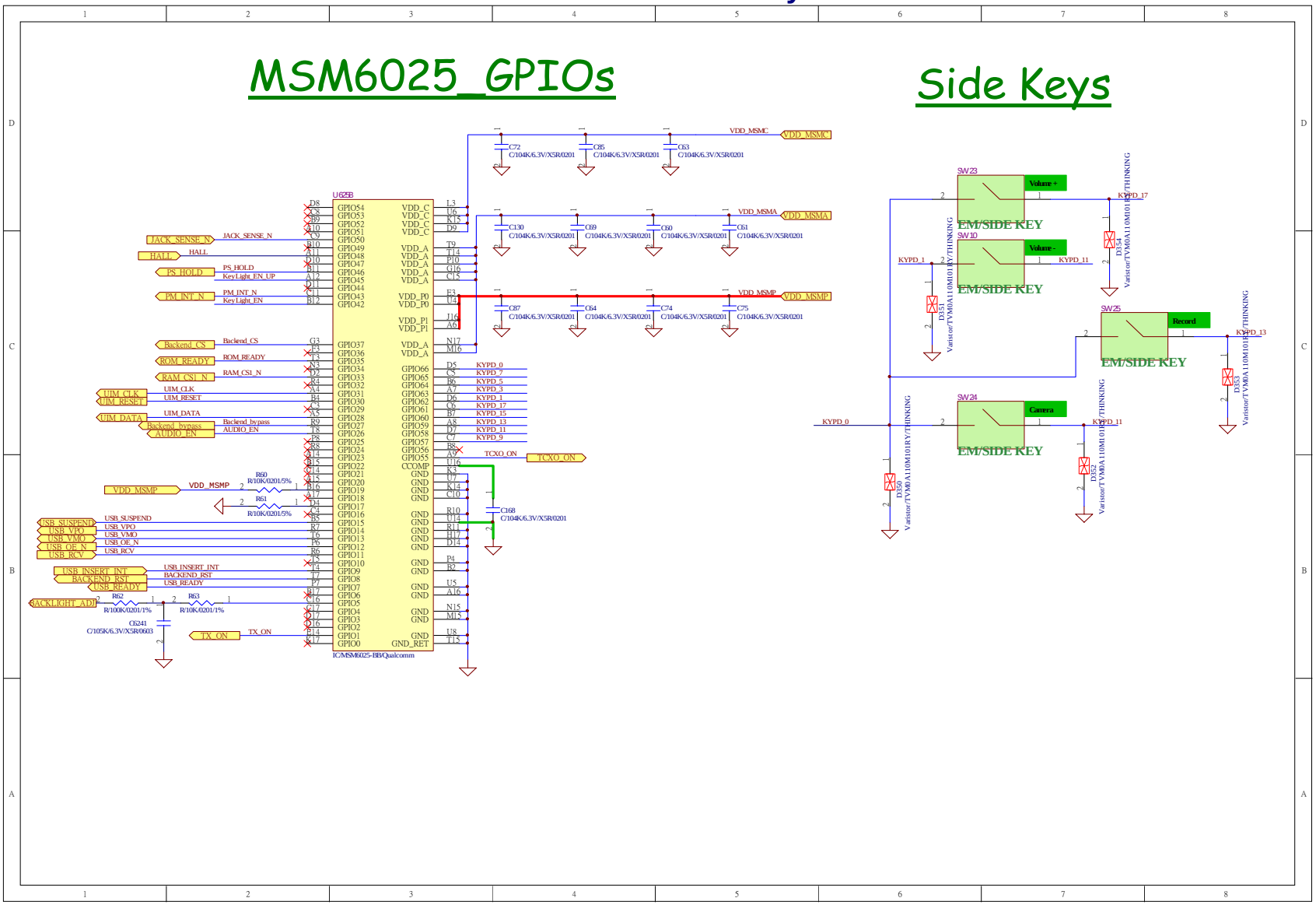

© 2006 Nokia Corporation Company Confidential

MSM6025-3 & Memory

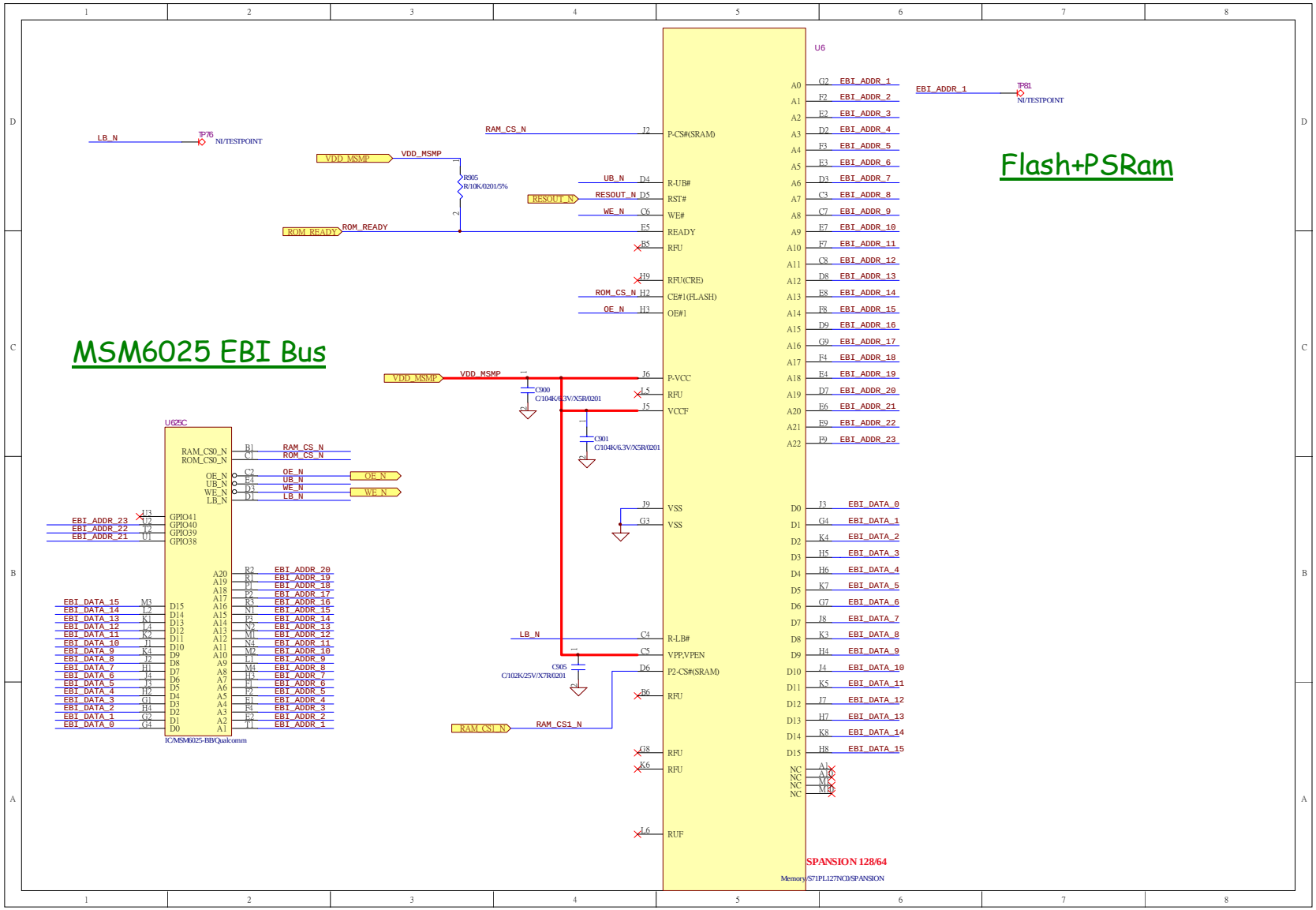

© 2006 Nokia Corporation Company Confidential

PM6610

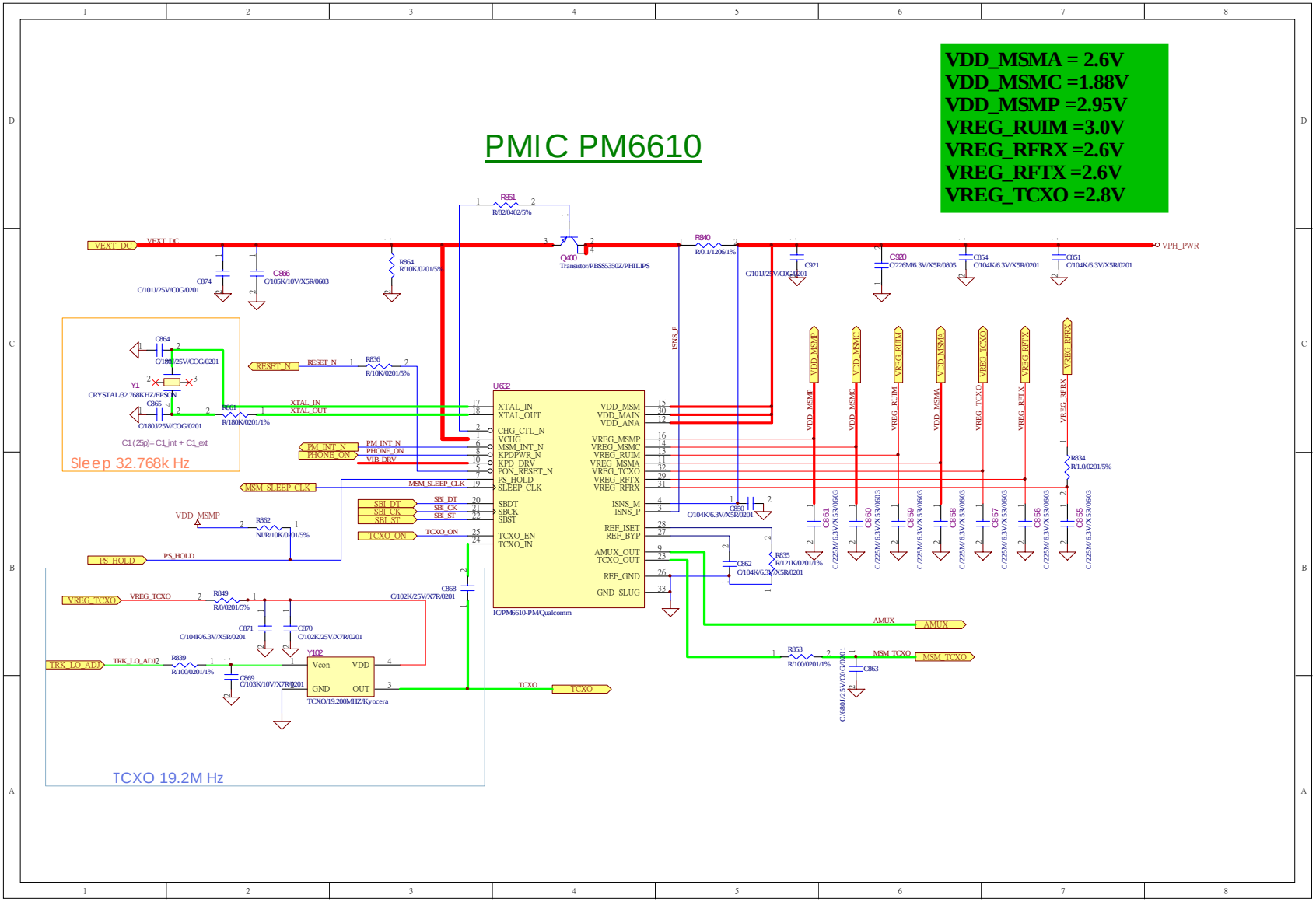

© 2006 Nokia Corporation Company Confidential

USB & Charge

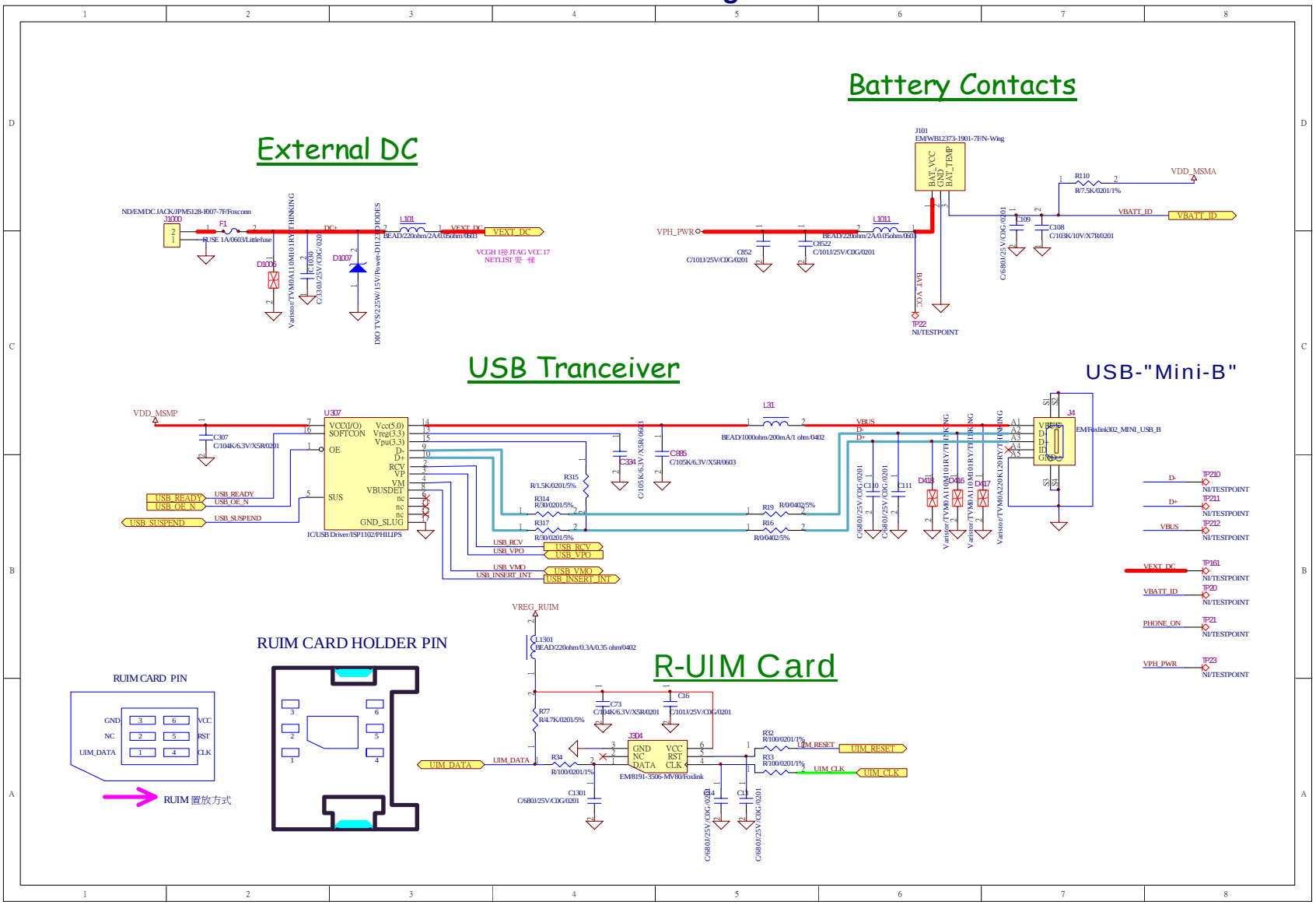

© 2006 Nokia Corporation Company Confidential

Audio

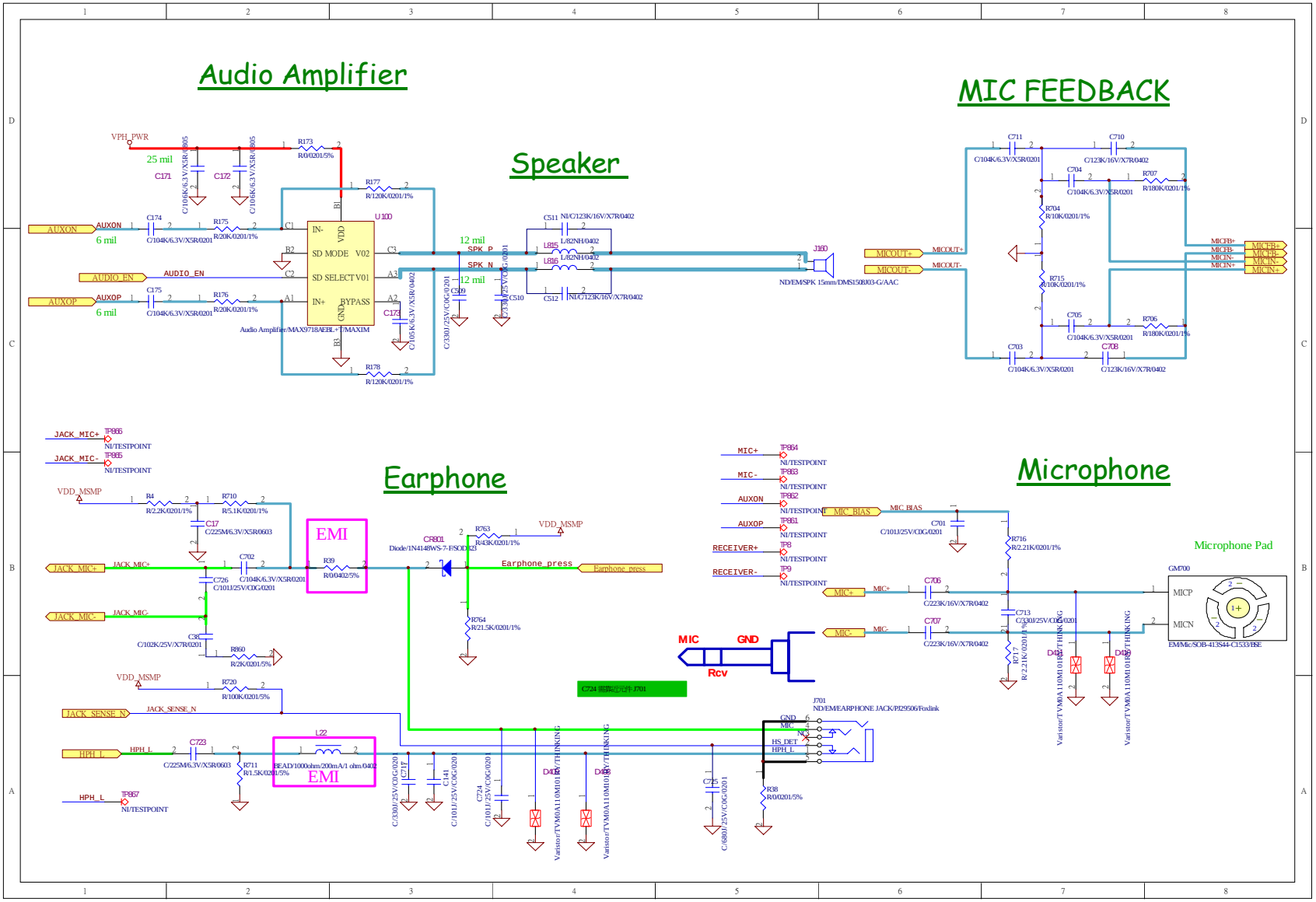

© 2006 Nokia Corporation Company Confidential

RFR6122

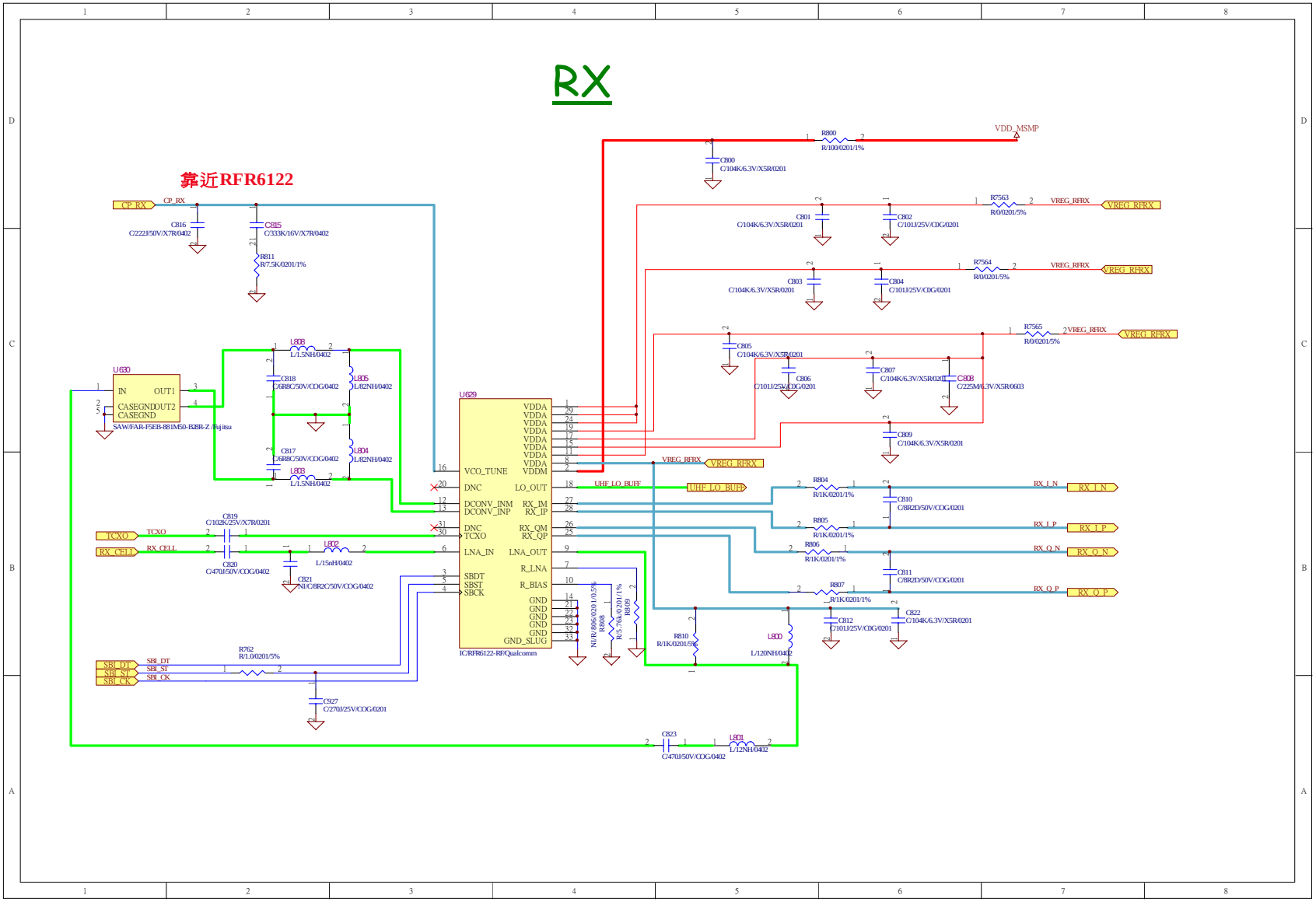

© 2006 Nokia Corporation Company Confidential

RFT6122

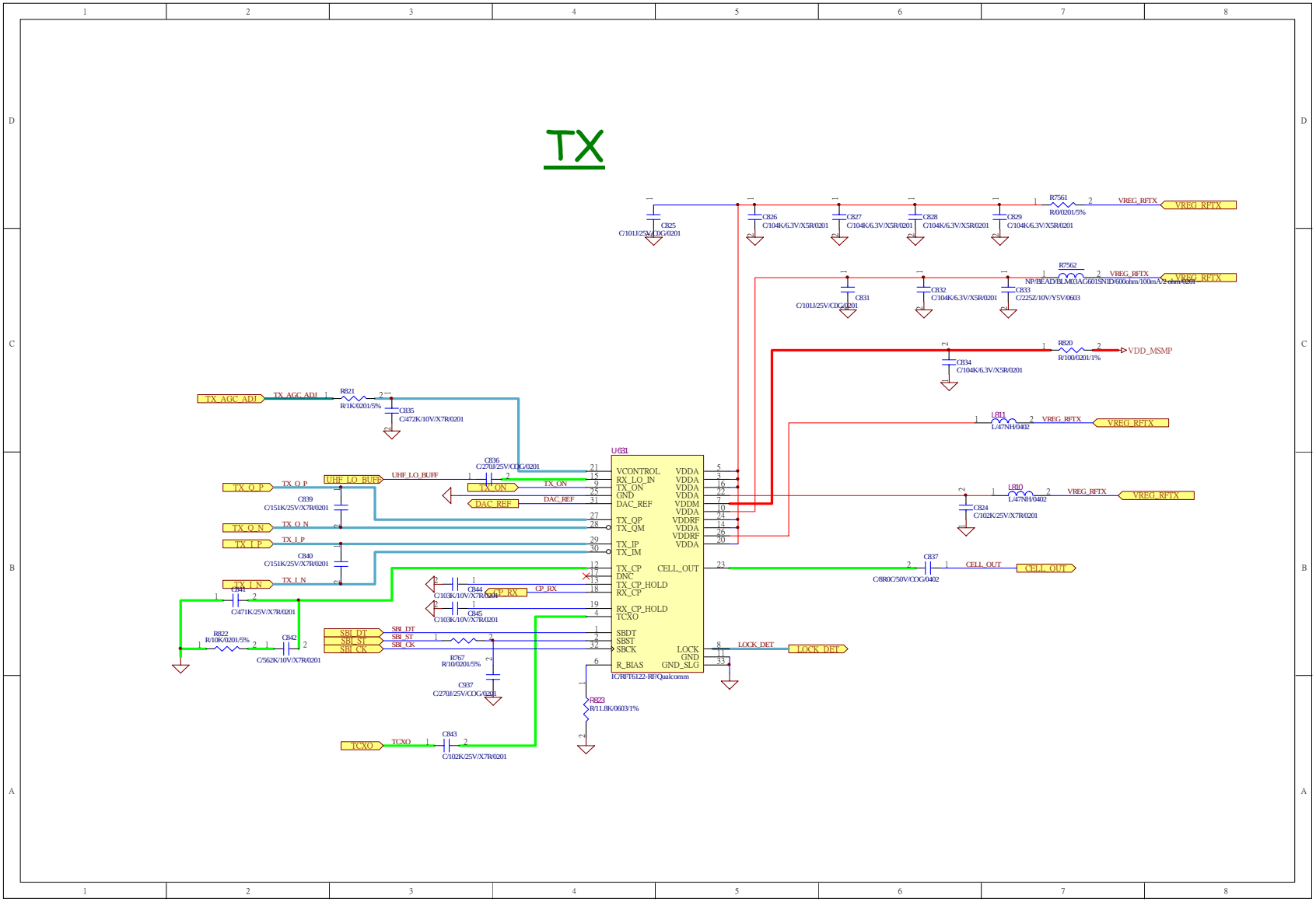

© 2006 Nokia Corporation Company Confidential

PA & ANT

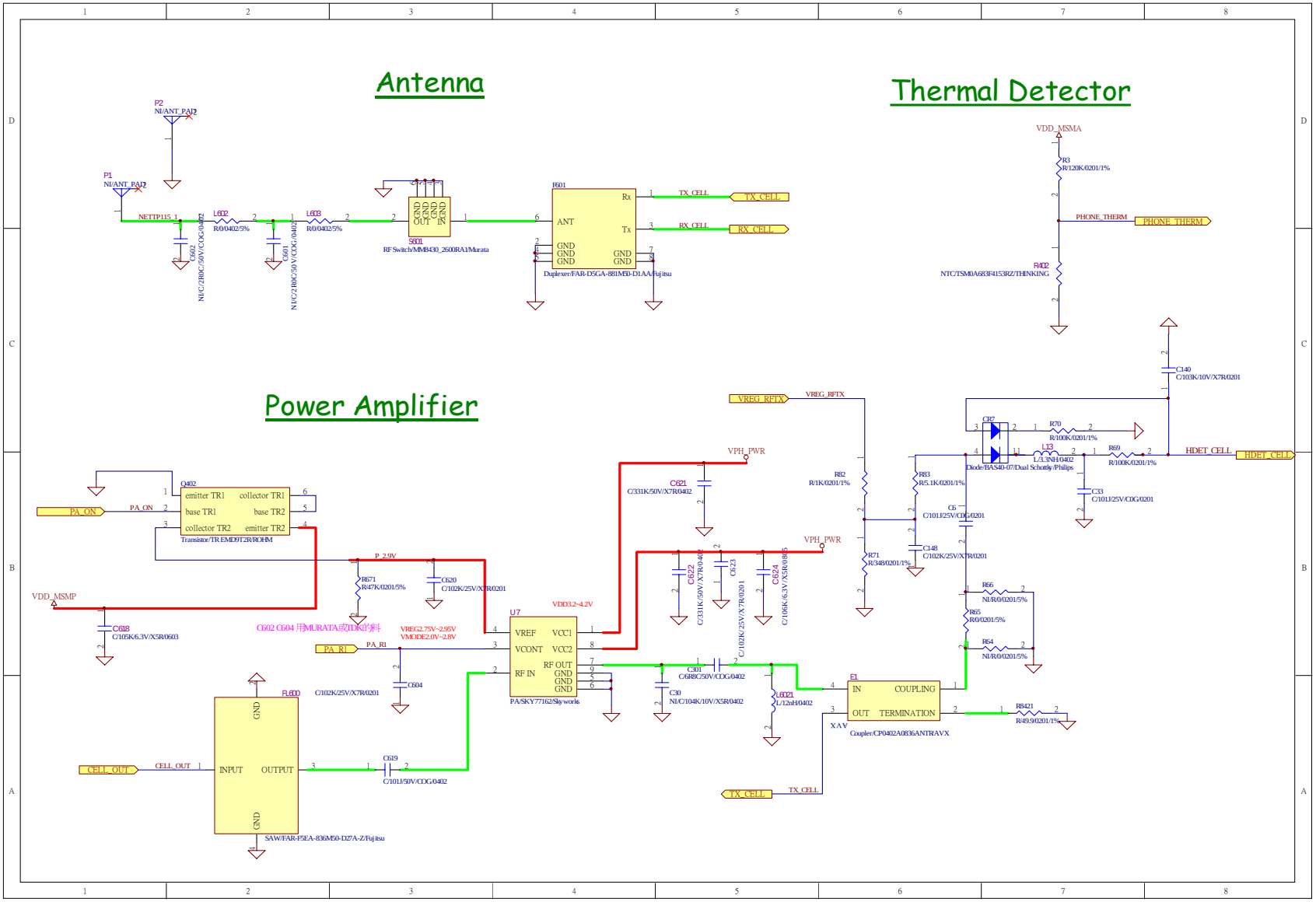

© 2006 Nokia Corporation Company Confidential

Keypad

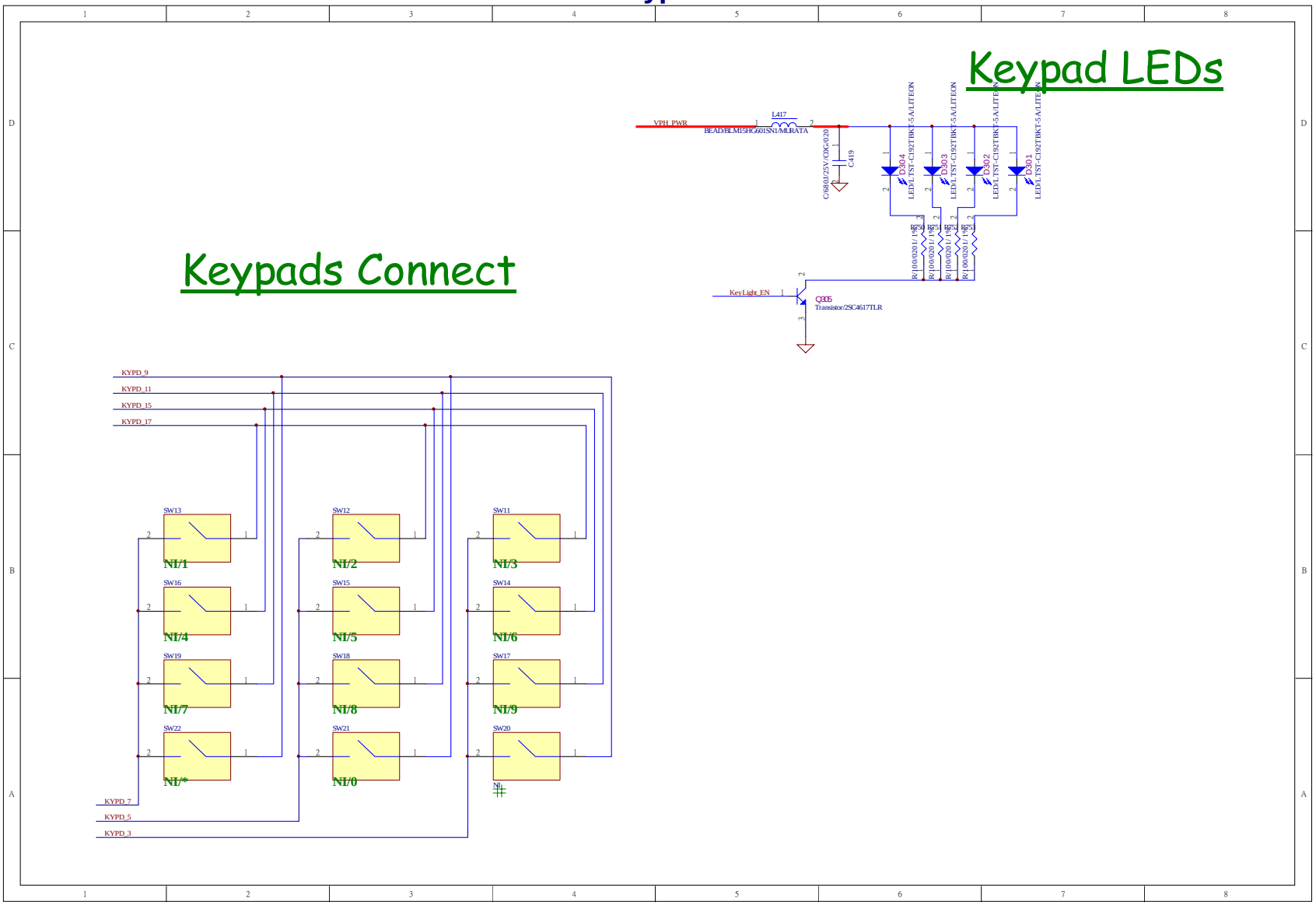

© 2006 Nokia Corporation Company Confidential

Interface

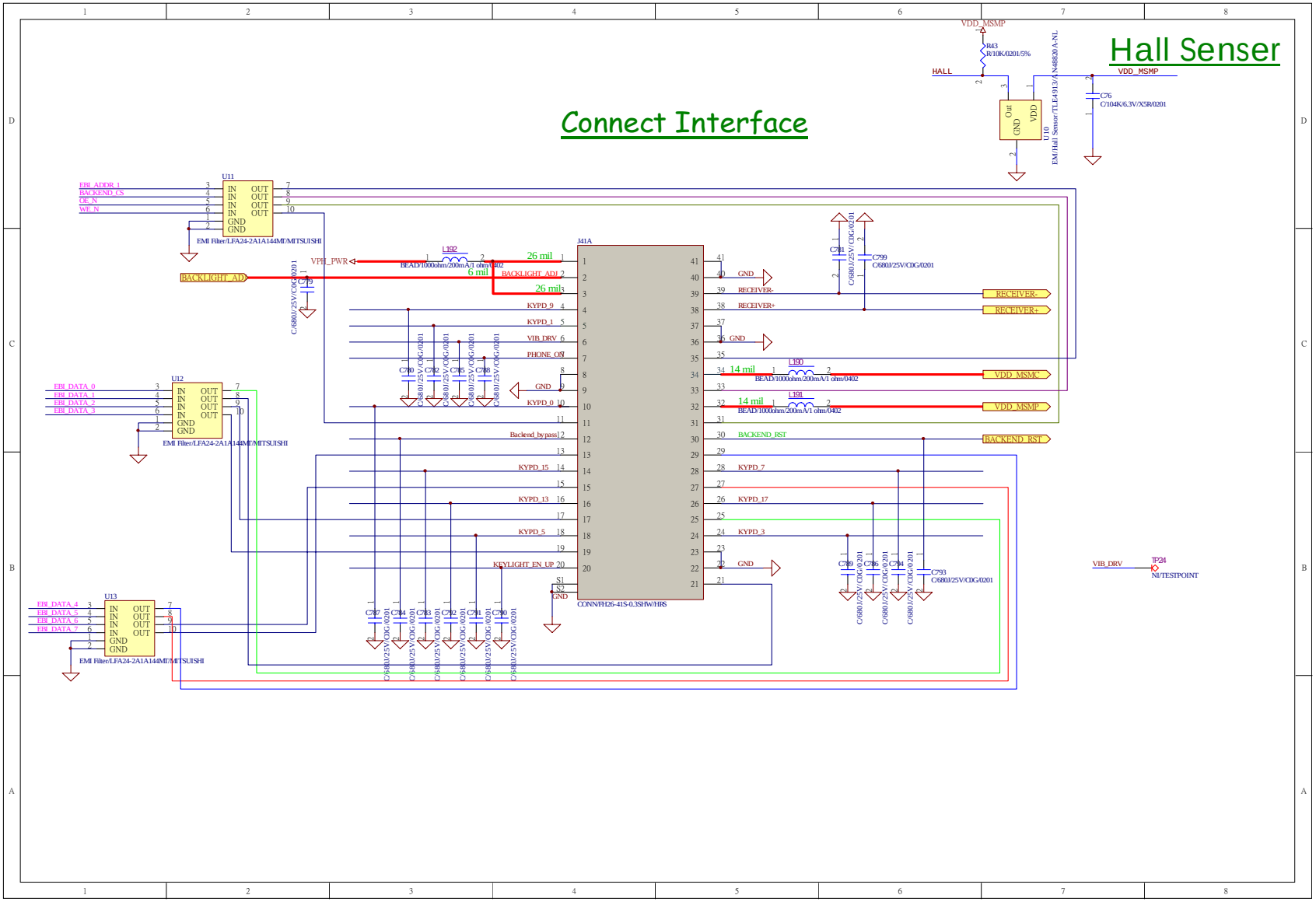

© 2006 Nokia Corporation Company Confidential

Subboard PCB Top Level

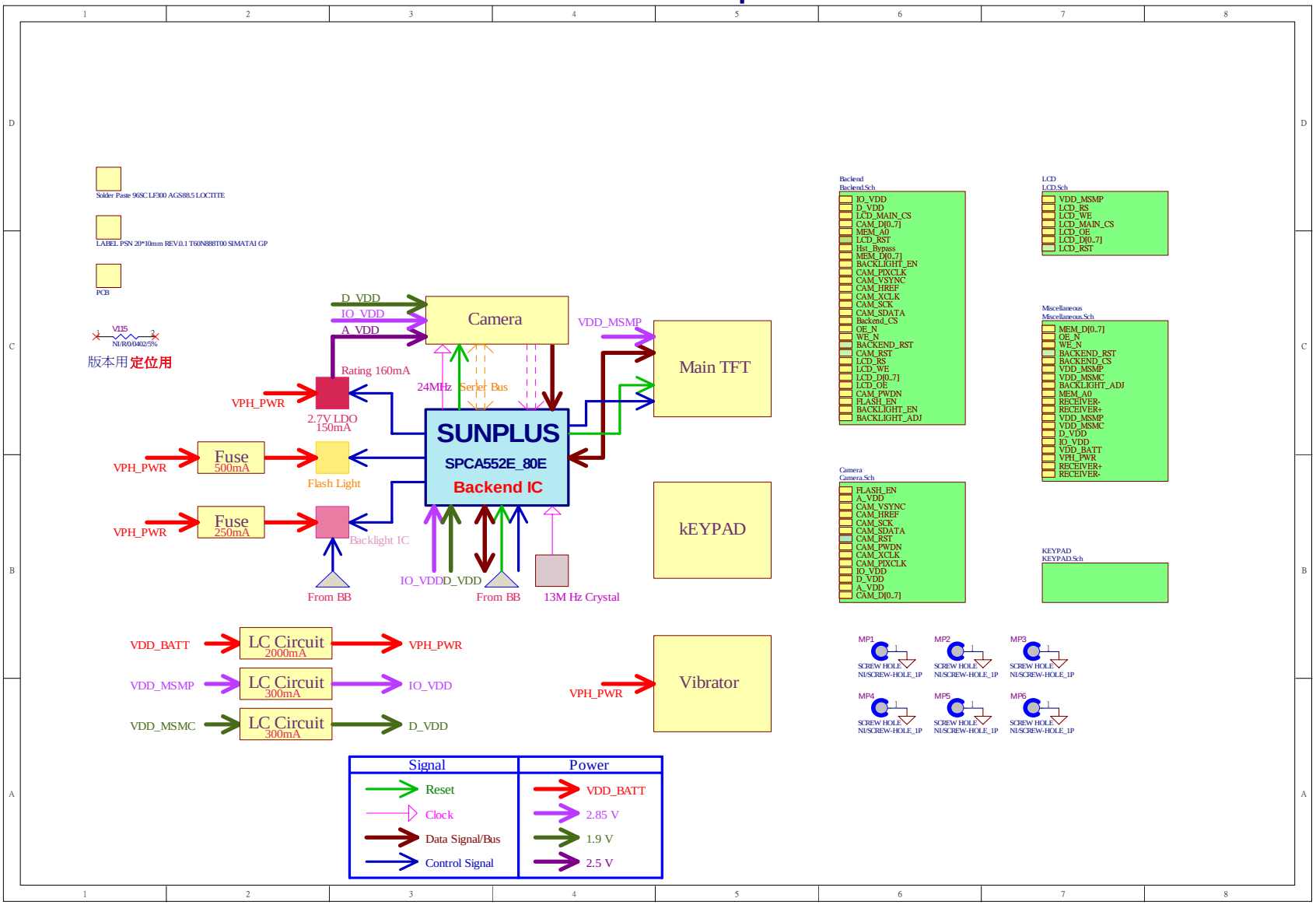

© 2006 Nokia Corporation Company Confidential

Camera

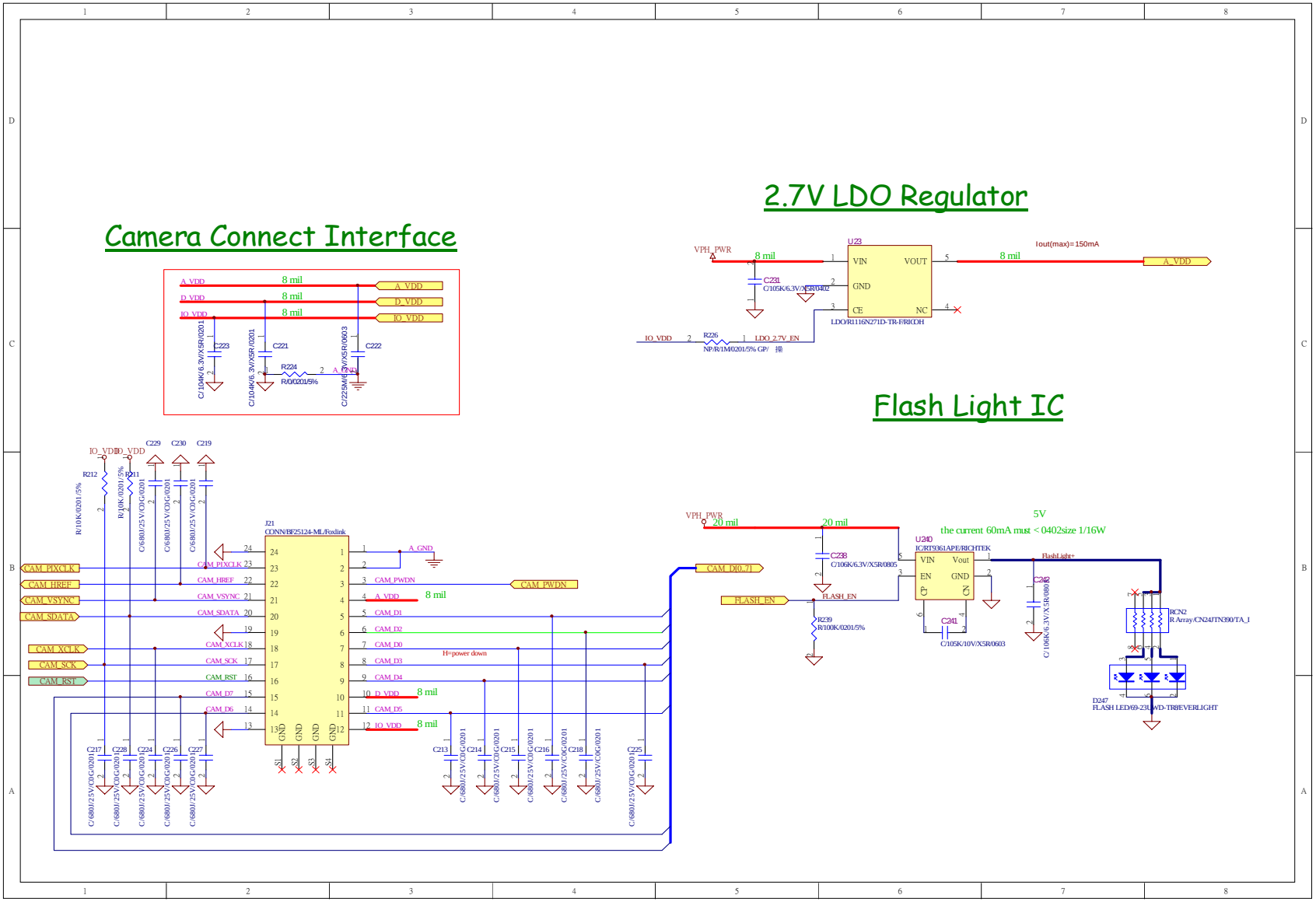

© 2006 Nokia Corporation Company Confidential

LCD & Vibrator

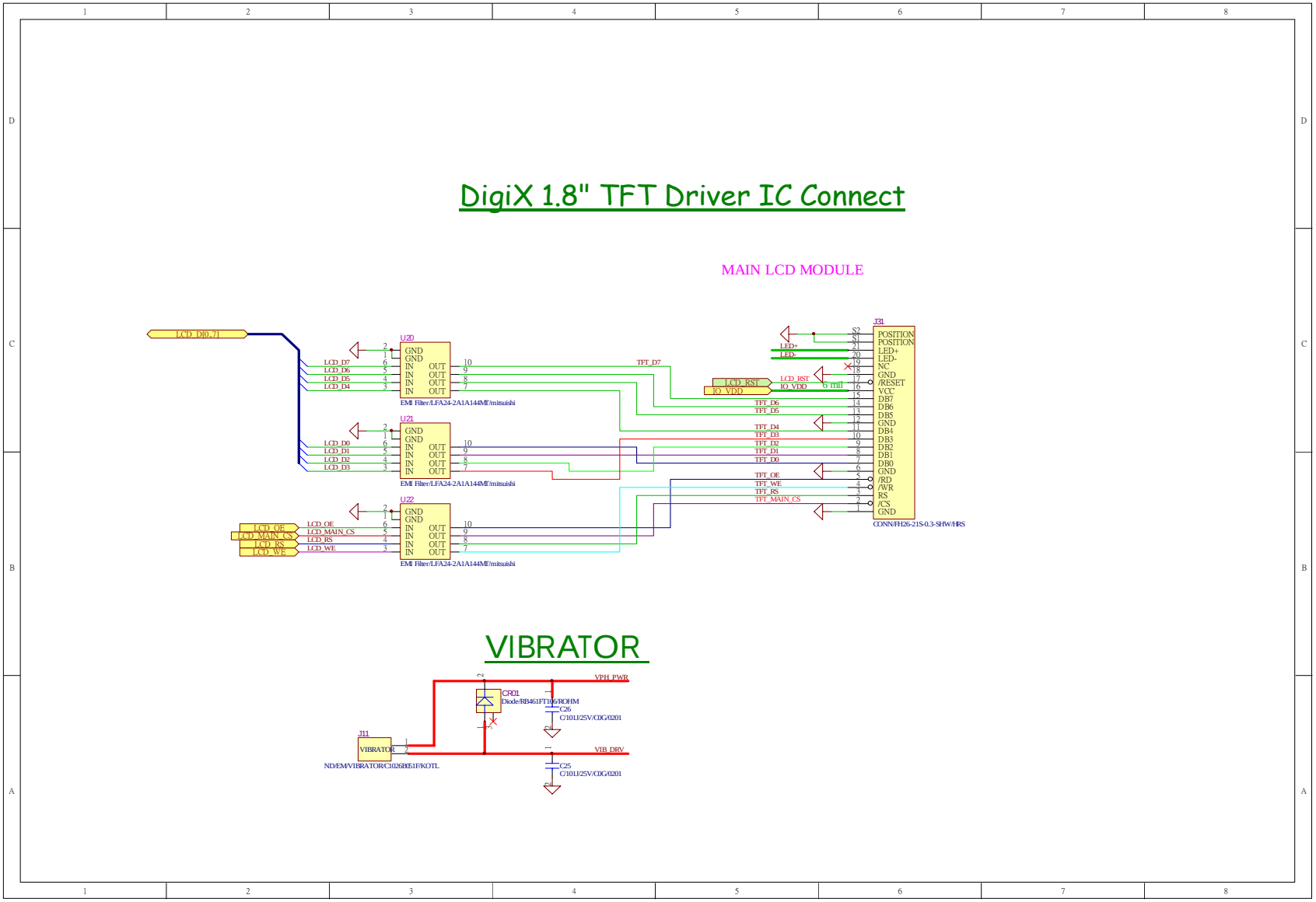

© 2006 Nokia Corporation Company Confidential

Miscellaneous

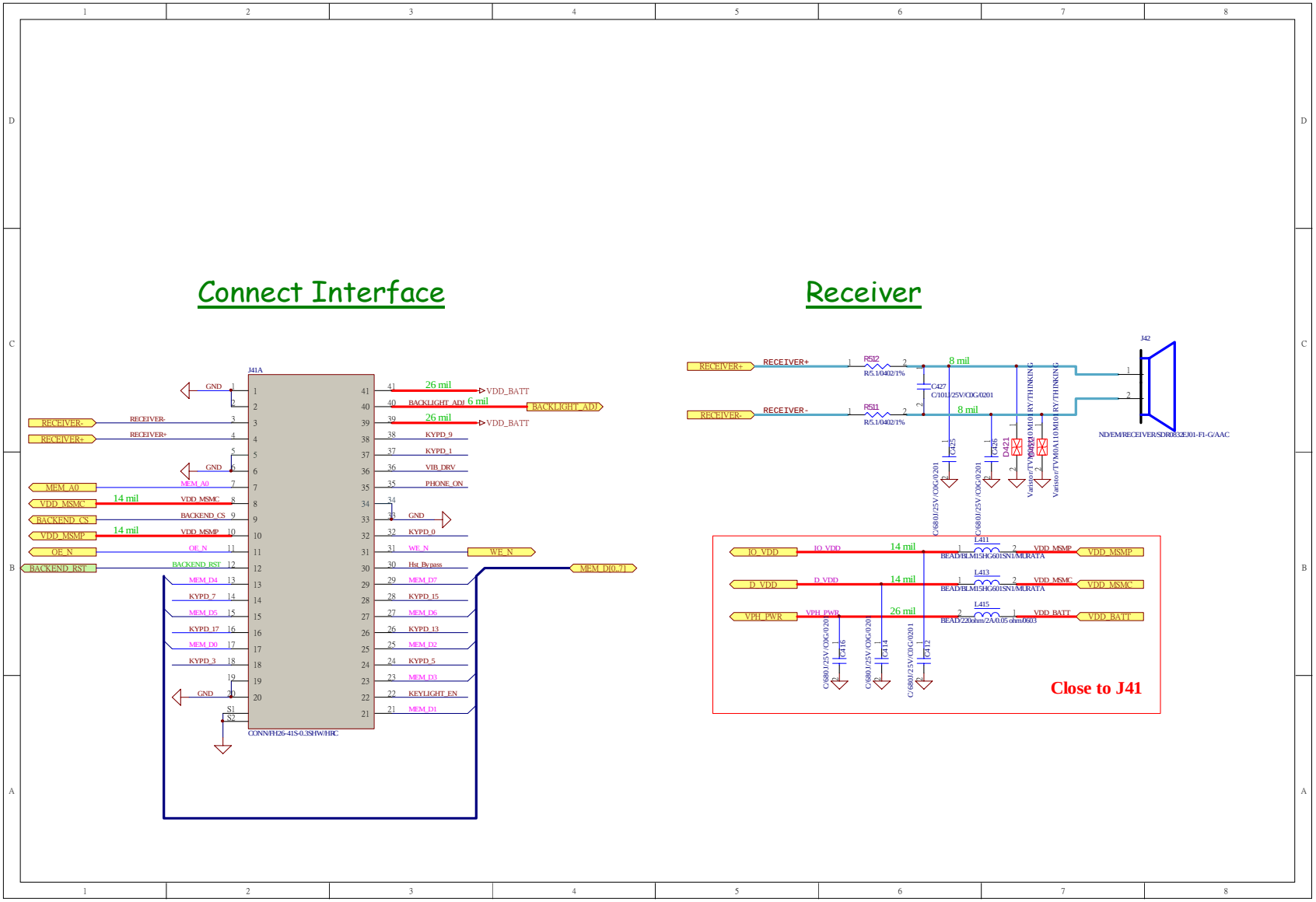

© 2006 Nokia Corporation Company Confidential

Keypad

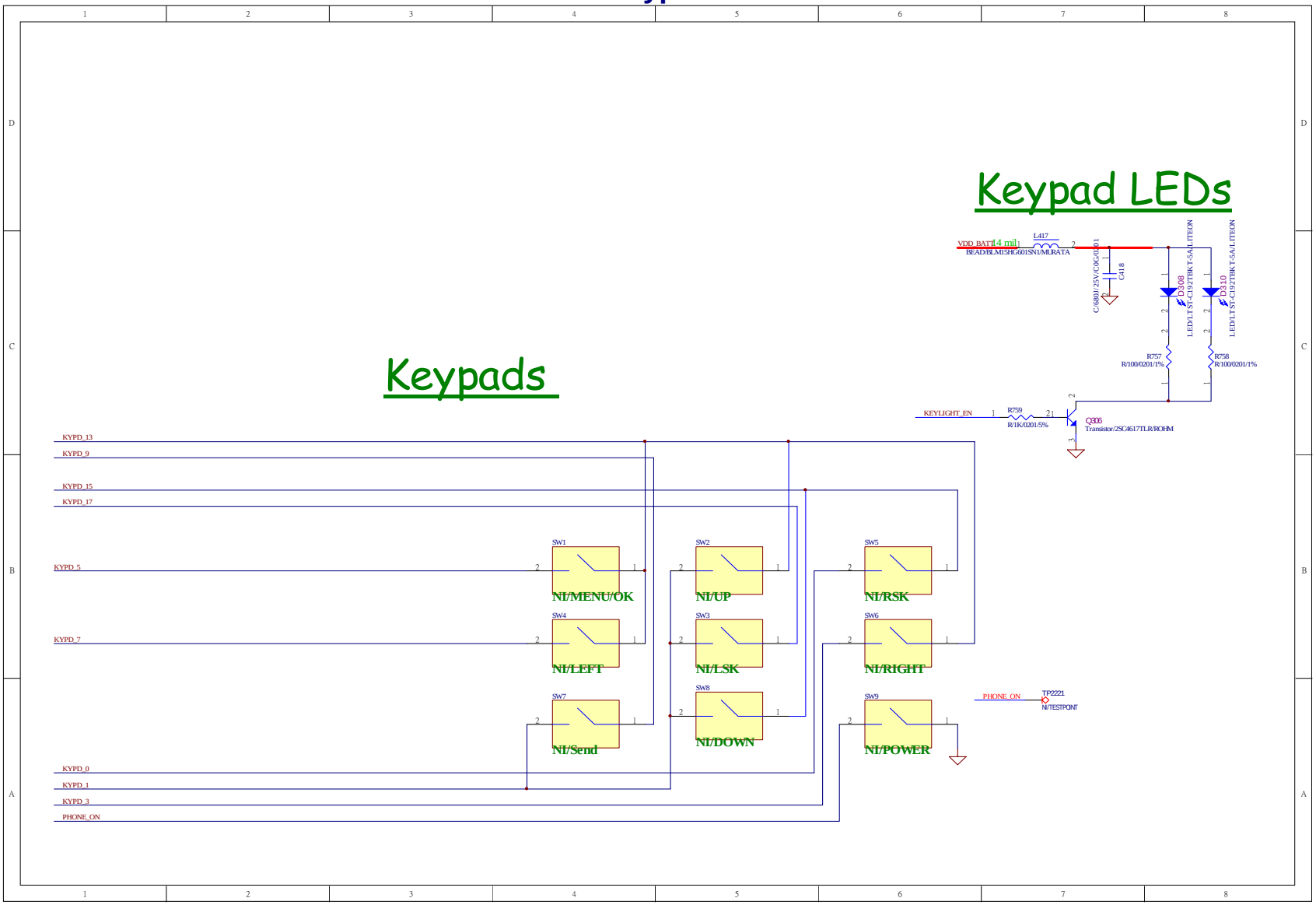

© 2006 Nokia Corporation Company Confidential

Backend

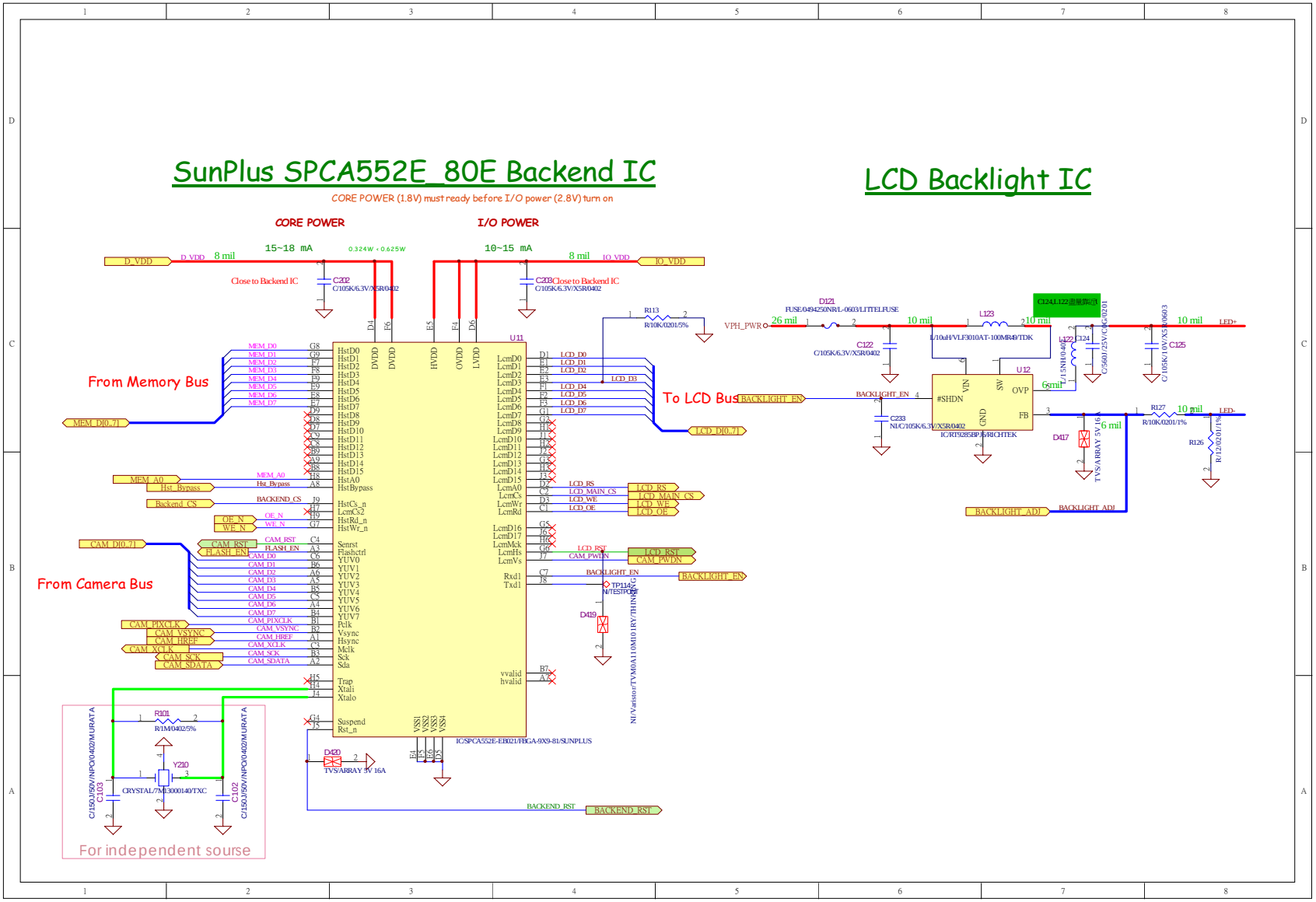

© 2006 Nokia Corporation Company Confidential

7088 Main PCB Component Layout - Top

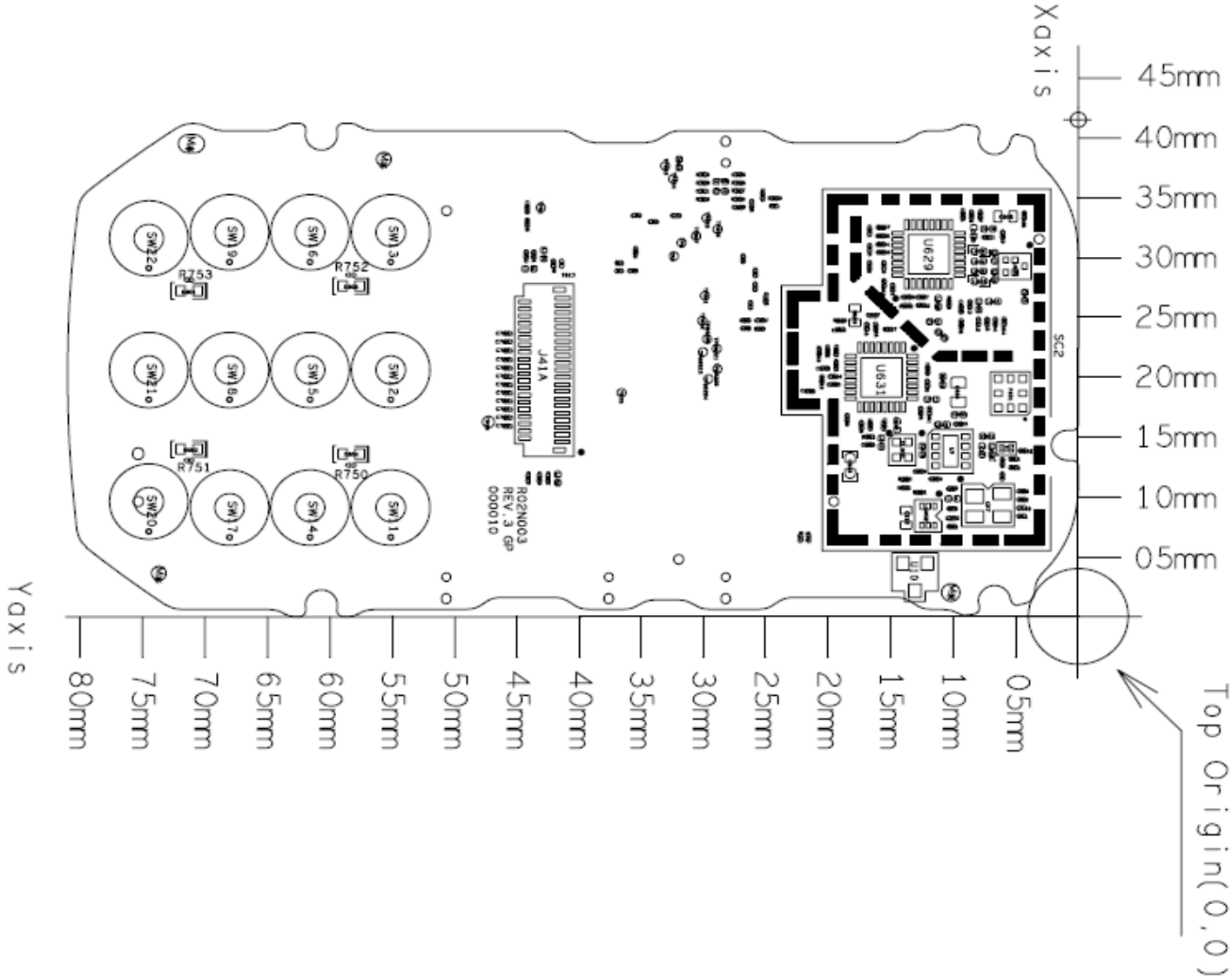

© 2006 Nokia Corporation Company Confidential

7088 Main PCB Component Layout - Bottom

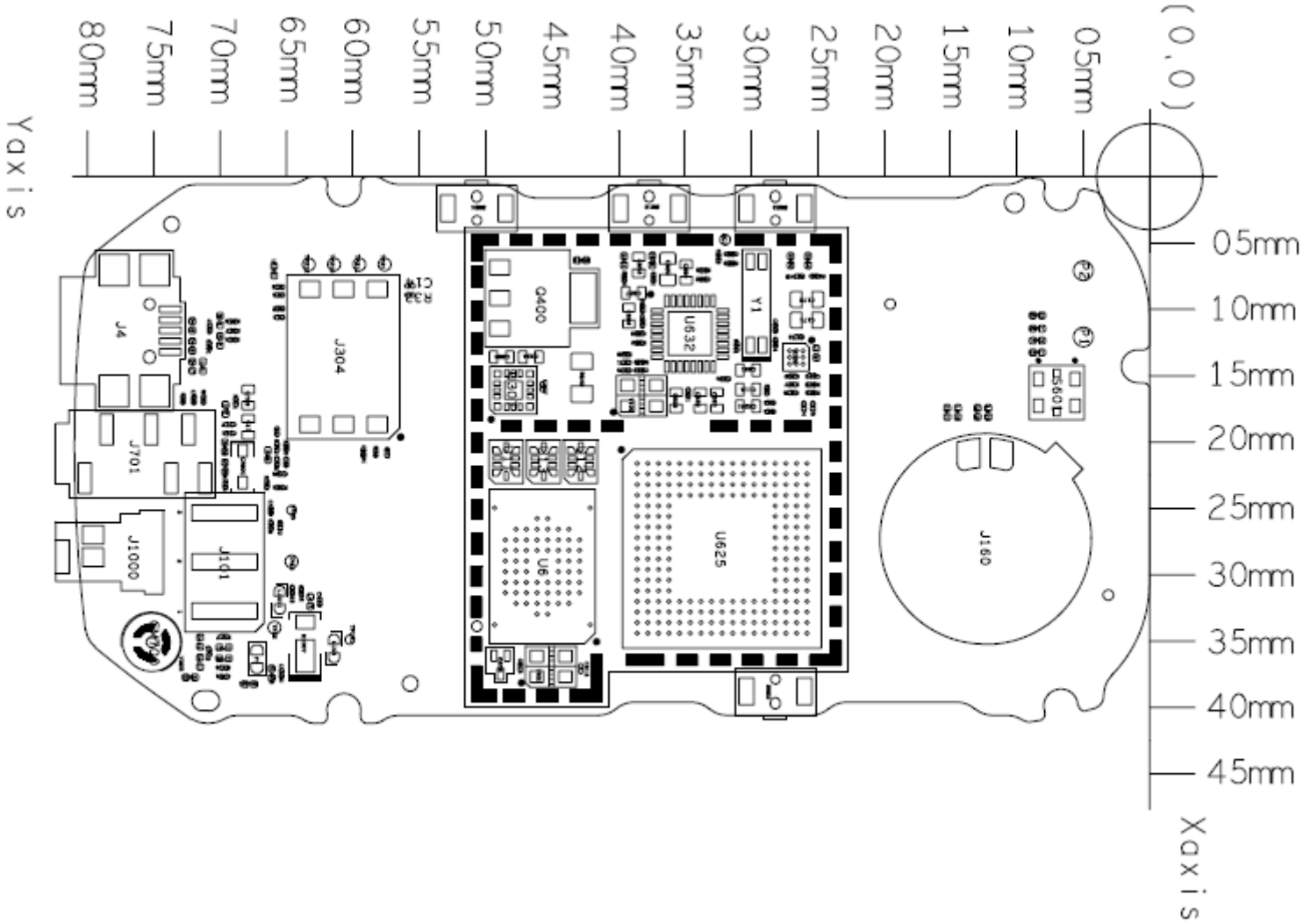

© 2006 Nokia Corporation Company Confidential

7088 Sub PCB Component Layout - Top

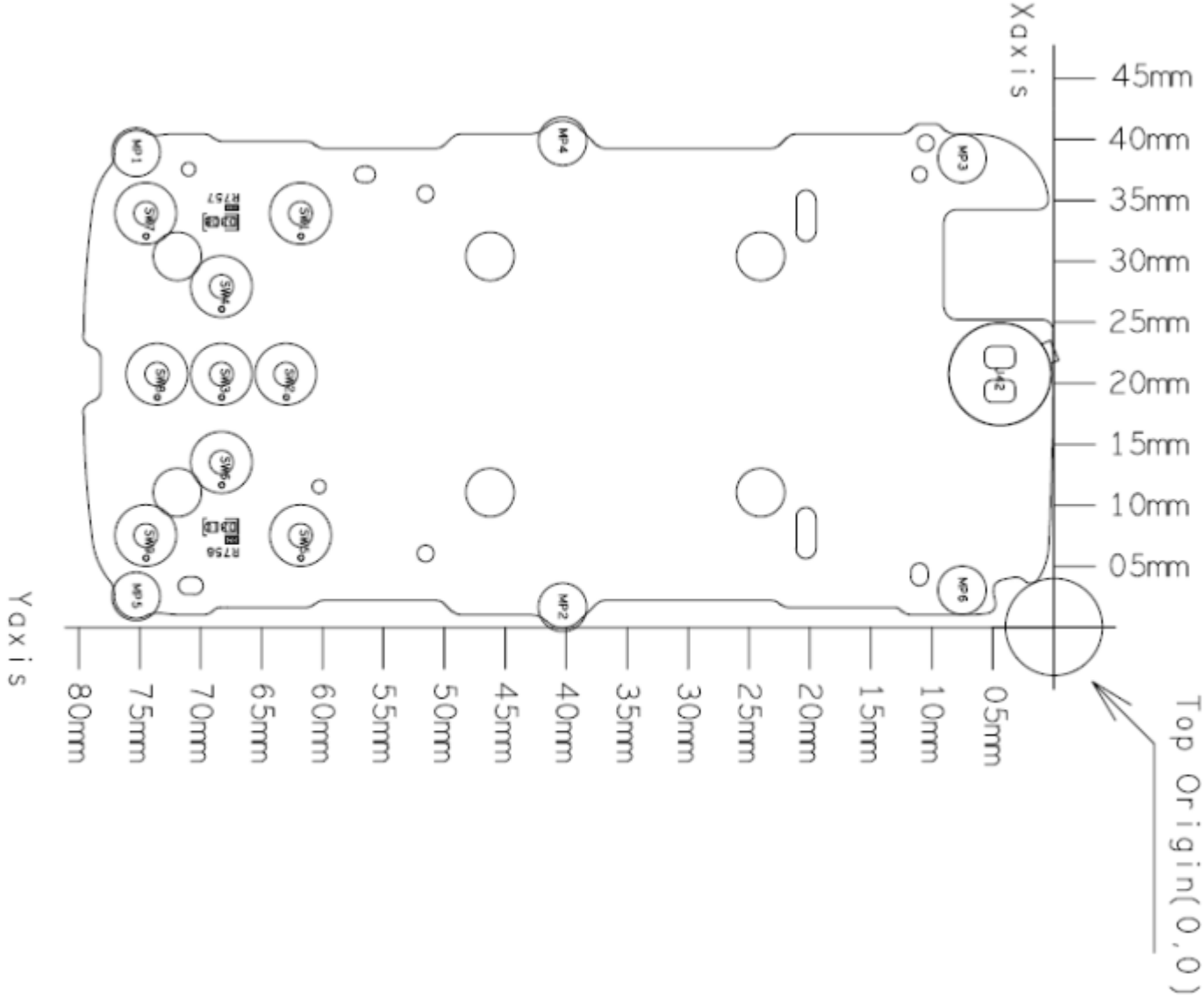

© 2006 Nokia Corporation Company Confidential

7088 Sub PCB Component Layout - Bottom

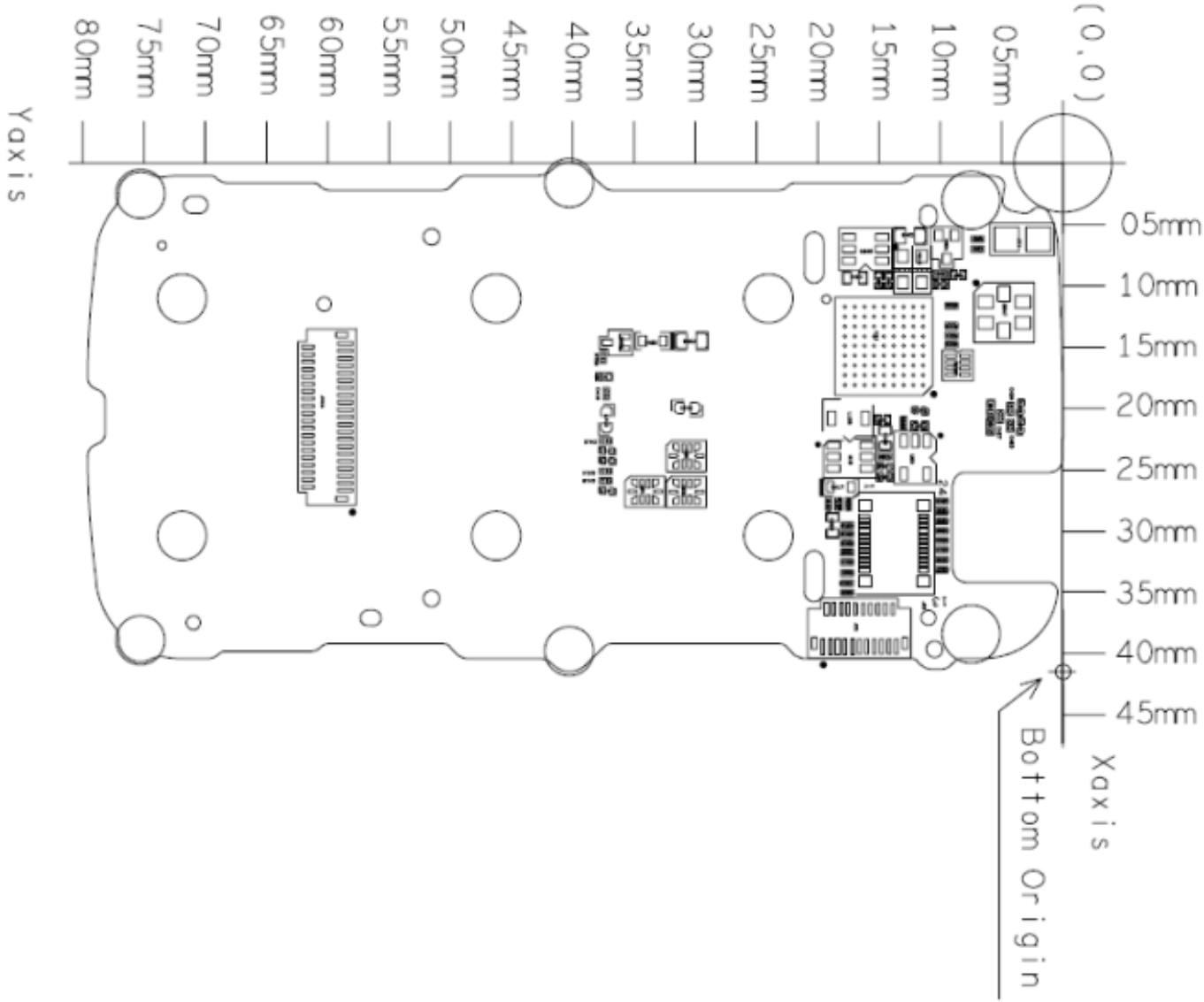

© 2006 Nokia Corporation Company Confidential

7088 FPC Layout – Top

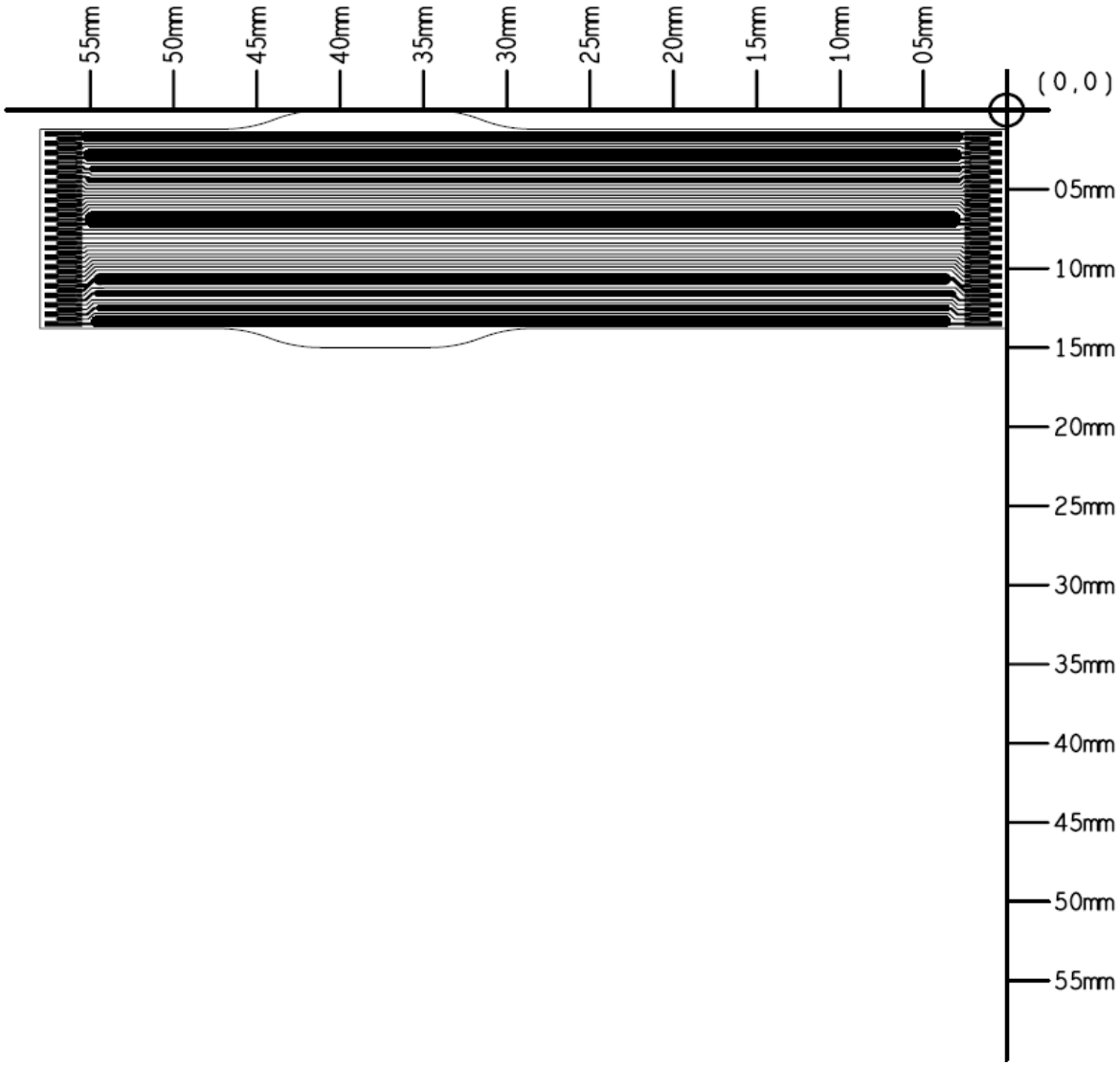

© 2006 Nokia Corporation Company Confidential