Nokia Customer Care

Service Manual

RM-627 (Nokia X5-01; L3&4)

Mobile Terminal

Part No: (Issue 1)

COMPANY CONFIDENTIAL

NOKIA
Care

Amendment Record Sheet

Amendment No	Date	Inserted By	Comments
Issue 1	6/2010	NS	

Copyright

IMPORTANT

This document is intended for use by qualified service personnel only.

Warnings and cautions

Warnings

- IF THE DEVICE CAN BE INSTALLED IN A VEHICLE, CARE MUST BE TAKEN ON INSTALLATION IN VEHICLES FITTED WITH ELECTRONIC ENGINE MANAGEMENT SYSTEMS AND ANTI-SKID BRAKING SYSTEMS. UNDER CERTAIN FAULT CONDITIONS, EMITTED RF ENERGY CAN AFFECT THEIR OPERATION. IF NECESSARY, CONSULT THE VEHICLE DEALER/ MANUFACTURER TO DETERMINE THE IMMUNITY OF VEHICLE ELECTRONIC SYSTEMS TO RF ENERGY.
- THE PRODUCT MUST NOT BE OPERATED IN AREAS LIKELY TO CONTAIN POTENTIALLY EXPLOSIVE ATMOSPHERES, FOR EXAMPLE, PETROL STATIONS (SERVICE STATIONS), BLASTING AREAS ETC.
- OPERATION OF ANY RADIO TRANSMITTING EQUIPMENT, INCLUDING CELLULAR TELEPHONES, MAY INTERFERE WITH THE FUNCTIONALITY OF INADEQUATELY PROTECTED MEDICAL DEVICES. CONSULT A PHYSICIAN OR THE MANUFACTURER OF THE MEDICAL DEVICE IF YOU HAVE ANY QUESTIONS. OTHER ELECTRONIC EQUIPMENT MAY ALSO BE SUBJECT TO INTERFERENCE.
- BEFORE MAKING ANY TEST CONNECTIONS, MAKE SURE YOU HAVE SWITCHED OFF ALL EQUIPMENT.

Cautions

- Servicing and alignment must be undertaken by qualified personnel only.
- Ensure all work is carried out at an anti-static workstation and that an anti-static wrist strap is worn.
- Ensure solder, wire, or foreign matter does not enter the telephone as damage may result.
- Use only approved components as specified in the parts list.
- Ensure all components, modules, screws and insulators are correctly re-fitted after servicing and alignment.
- Ensure all cables and wires are repositioned correctly.
- Never test a mobile phone WCDMA transmitter with full Tx power, if there is no possibility to perform the measurements in a good performance RF-shielded room. Even low power WCDMA transmitters may disturb nearby WCDMA networks and cause problems to 3G cellular phone communication in a wide area.
- During testing never activate the GSM or WCDMA transmitter without a proper antenna load, otherwise GSM or WCDMA PA may be damaged.

For your safety

QUALIFIED SERVICE

Only qualified personnel may install or repair phone equipment.

ACCESSORIES AND BATTERIES

Use only approved accessories and batteries. Do not connect incompatible products.

CONNECTING TO OTHER DEVICES

When connecting to any other device, read its user's guide for detailed safety instructions. Do not connect incompatible products.

Care and maintenance

This product is of superior design and craftsmanship and should be treated with care. The suggestions below will help you to fulfil any warranty obligations and to enjoy this product for many years.

- Keep the phone and all its parts and accessories out of the reach of small children.
- Keep the phone dry. Precipitation, humidity and all types of liquids or moisture can contain minerals that will corrode electronic circuits.
- Do not use or store the phone in dusty, dirty areas. Its moving parts can be damaged.
- Do not store the phone in hot areas. High temperatures can shorten the life of electronic devices, damage batteries, and warp or melt certain plastics.
- Do not store the phone in cold areas. When it warms up (to its normal temperature), moisture can form inside, which may damage electronic circuit boards.
- Do not drop, knock or shake the phone. Rough handling can break internal circuit boards.
- Do not use harsh chemicals, cleaning solvents, or strong detergents to clean the phone.
- Do not paint the phone. Paint can clog the moving parts and prevent proper operation.
- Use only the supplied or an approved replacement antenna. Unauthorised antennas, modifications or attachments could damage the phone and may violate regulations governing radio devices.

All of the above suggestions apply equally to the product, battery, charger or any accessory.

ESD protection

Nokia requires that service points have sufficient ESD protection (against static electricity) when servicing the phone.

Any product of which the covers are removed must be handled with ESD protection. The SIM card can be replaced without ESD protection if the product is otherwise ready for use.

To replace the covers ESD protection must be applied.

All electronic parts of the product are susceptible to ESD. Resistors, too, can be damaged by static electricity discharge.

All ESD sensitive parts must be packed in metallized protective bags during shipping and handling outside any ESD Protected Area (EPA).

Every repair action involving opening the product or handling the product components must be done under ESD protection.

ESD protected spare part packages MUST NOT be opened/closed out of an ESD Protected Area.

For more information and local requirements about ESD protection and ESD Protected Area, contact your local Nokia After Market Services representative.

Battery information

Note: A new battery's full performance is achieved only after two or three complete charge and discharge cycles!

The battery can be charged and discharged hundreds of times but it will eventually wear out. When the operating time (talk-time and standby time) is noticeably shorter than normal, it is time to buy a new battery.

Use only batteries approved by the phone manufacturer and recharge the battery only with the chargers approved by the manufacturer. Unplug the charger when not in use. Do not leave the battery connected to a charger for longer than a week, since overcharging may shorten its lifetime. If left unused a fully charged battery will discharge itself over time.

Temperature extremes can affect the ability of your battery to charge.

For good operation times with Li-Ion batteries, discharge the battery from time to time by leaving the product switched on until it turns itself off (or by using the battery discharge facility of any approved accessory available for the product). Do not attempt to discharge the battery by any other means.

Use the battery only for its intended purpose.

Never use any charger or battery which is damaged.

Do not short-circuit the battery. Accidental short-circuiting can occur when a metallic object (coin, clip or pen) causes direct connection of the + and - terminals of the battery (metal strips on the battery) for example when you carry a spare battery in your pocket or purse. Short-circuiting the terminals may damage the battery or the connecting object.

Leaving the battery in hot or cold places, such as in a closed car in summer or winter conditions, will reduce the capacity and lifetime of the battery. Always try to keep the battery between 15°C and 25°C (59°F and 77°F). A phone with a hot or cold battery may temporarily not work, even when the battery is fully charged. Batteries' performance is particularly limited in temperatures well below freezing.

Do not dispose of batteries in a fire!

Dispose of batteries according to local regulations (e.g. recycling). Do not dispose as household waste.

Company policy

Our policy is of continuous development; details of all technical modifications will be included with service bulletins.

While every endeavour has been made to ensure the accuracy of this document, some errors may exist. If any errors are found by the reader, NOKIA MOBILE PHONES Business Group should be notified in writing/e-mail.

Please state:

- Title of the Document + Issue Number/Date of publication
- Latest Amendment Number (if applicable)
- Page(s) and/or Figure(s) in error

Please send to:

NOKIA CORPORATION

Nokia Mobile Phones Business Group

Nokia Customer Care

PO Box 86

FIN-24101 SALO

Finland

E-mail: Service.Manuals@nokia.com

(This page left intentionally blank.)

Nokia X5-01; L3&4 Service Manual Structure

(This page left intentionally blank.)

1 — General information

(This page left intentionally blank.)

Table of Contents

List of Tables

List of Figures

(This page left intentionally blank.)

Product selection

RM-627 (Nokia X5–01) is a GSM/WCDMA dual mode phone, supporting EGSM850/900/1800/1900 and WCDMA bands I, II and VIII.

Figure 1 RM-627 (Nokia X5–01) product picture

Phone features

Display and keypad features

- 2.36" QVGA 18 bit color display in landscape orientation
- QWERTY Slide Form Factor
- 5-way Navi key, Soft keys, Call and end keys, Home and Media keys, Volume keys

Hardware features

- Main camera: 5 megapixel EDOF camera with integrated flash
- MicroUSB connector/charger plug for data transfer (USB 2.0) and charging
- High speed USB (FS/HS)
- Bluetooth version 2.0
- microSD memory card connector
- Accelerometer
- Stereo Music Player
- Integrated handsfree speaker
- Internal vibra
- Plug-in SIM 1.8V and 3.0V, more than 1000 entries
- 3.5mm AV connector

RF features

- Internal antennas
- GSM/EDGE 850/900/1800/1900
- WCDMA band I, II and VIII
- High speed upload - HSUPA cat 5 (2.0 Mbps)

- High speed download - HSDPA cat 9 (10.2 Mbps)
- EDGE: MSC 32
- GPRS: MSC 32
- CSD for browsing and as data modem
- WLAN

Software and user interface features

Selection of software application and features

- S60 release 3.2.3 w/LIVE (people centric) homescreen
- Active Stand-by
- Ovi Music 3.0, Ovi Sounds 1.0
- OVI Store 1.6
- OVI Contacts 1.5
- Spin the Music & Message in-box
- OMA DRM 2.0 (Digital Right Management)
- Windows Media DRM 10.0
- OMA MMS 1.2, MMS Conformance 3.0, AMR and SMIL AP
- OMA Client Provisioning v1.1
- Java
- Video recording in upto VGA (15fps)
- Music Player for MP3, AAC, eAAC+ and WMA
- Video player 3GPP H.263 playback+streaming and MPEG4 recording and playback
- Ring tones: Video, MP3, AAC, eAAC+ and polyphonic (64 voices) ringing tones
- WAP 2.0, XHTML browser over HTTP/TCP/IP stack
- SyncML (local and remote)
- Audio messaging
- Flight Mode
- OVI Suite 2.0/2.1

Accessories

Sales package contents

- Nokia X5–01 phone
- Nokia Battery BL-5F
- Travel Charger AC-6
- Nokia Wired Headset WH-102
- Nokia Micro USB Cable CA-101D
- Nokia MU-37, 2 GB micro SD
- User Guide
- Symbian Leaflet
- Phone Leaflet

Table 1 Battery and chargers

Type	Name
Note: This phone is charged through the Micro USB port.	
BL-5F	Battery 950 mAh Li-Ion
AC-6	USB charger

Table 2 Car accessories

Type	Name
DC-10	High-Power retractable car charger
HF-510	Plug-In car kit with display and DSP

Table 3 Headsets

Type	Name
Wired	
WH-102	Stereo headset
WH-500	Stereo headset (headband)
WH-701	Stereo headset (in-ear)
Wireless	
BH-504	Bluetooth stereo headset (headband)
BH-505	Bluetooth stereo headset (neckband)

Table 4 Cables

Type	Name
CA-101D	Micro USB cable

Technical specifications

General specifications

Unit	Dimension (mm)	Weight (g)	Volume (cc)
RM-627 transceiver with BL-5F 950 mAh Li-Ion battery pack	74.3 x 66.4 x 16.9	129	113.4

Main RF characteristics for GSM850/900/1800/1900 and WCDMA band I, II and VIII phones

Parameter	Unit
Cellular system	GSM850, EGSM900, GSM1800/1900, WCDMA I (2100), WCDMA II (1900) and WCDMA VIII (900)

Parameter	Unit
Rx frequency band	GSM850: 869 - 894 MHz
	EGSM900: 925 - 960 MHz
	GSM1800: 1805 - 1880 MHz
	GSM1900: 1930 - 1990 MHz
	WCDMA I (2100): 2110 - 2170 MHz
	WCDMA II (1900): 1930 - 1990
	WCDMA VIII (900): 925- 960 MHz
Tx frequency band	GSM850: 824 - 849 MHz
	EGSM900: 880 - 915 MHz
	GSM1800: 1710 - 1785 MHz
	GSM1900: 1850 - 1910 MHz
	WCDMA I (2100): 1920 - 1980 MHz
	WCDMA II (1900): 1850 - 1910
	WCDMA VIII (900): 880 - 915 MHz
Output power	GSM850: +5 ...+32.5dBm/3.2mW ... 2W
	GSM900: +5 ... +32.5dBm/3.2mW ... 2W
	GSM1800: +0 ... +30dBm/1.0mW ... 1W
	GSM1900: +0 ... +30dBm/1.0mW ... 1W
	WCDMA I (2100): -50 ... +23 dBm/0.01µW ... 199.5mW
	WCDMA II (1900): -50 ... +22 dBm/0.01µW ... 158.5mW
	WCDMA VIII (900): -50 ... +23 dBm/0.01µW ... 199.5mW
Number of RF channels	GSM850: 124
	GSM900: 174
	GSM1800: 374
	GSM1900: 299
	WCDMA I (2100): 277
	WCDMA II (1900): 289
	WCDMA VIII (900): 152
Channel spacing	200 kHz

Parameter	Unit
Number of Tx power levels	GSM850: 15
	GSM900: 15
	GSM1800: 16
	GSM1900: 16
	WCDMA I (2100): 75
	WCDMA II (1900): 75
	WCDMA VIII (900): 75

Battery endurance

Battery	Talk time	Standby time
BL-5F 950 mAh Li-ion	GSM850: 4 h Other GSM-bands: 5 h WCDMA: 3.5 h	GSM: 400 h WCDMA: 400 h

Note: Variation in operation times will occur depending on SIM card, network settings and usage. Talk time is increased by up to 30% if half rate is active, and reduced by 5% if enhanced full rate is active.

Environmental conditions

Environmental condition	Ambient temperature	Notes
Normal operation	-15 ºC ... +55 ºC	Specifications fulfilled
Reduced performance	55 ºC ... +70 ºC	Operational only for short periods
Intermittent or no operation	-40 ºC ... -15 ºC and +70 ºC ... +85ºC	Operation not guaranteed but an attempt to operate will not damage the phone
No operation or storage	<-40 ºC and >+85 ºC	No storage. An attempt to operate may cause permanent damage
Charging allowed	-15 ºC ... +55 ºC	
Long term storage conditions	0 ºC ... +85 ºC	
Humidity and water resistance		Relative humidity range is 5 to 95%. Condensed or dripping water may cause intermittent malfunctions. Protection against dripping water has to be implemented in (enclosure) mechanics. Continuous dampness will cause permanent damage to the module.

(This page left intentionally blank.)

2 — Service Devices and Service Concepts

(This page left intentionally blank.)

Table of Contents

List of Figures

(This page left intentionally blank.)

Service devices

Product specific devices

The table below gives a short overview of service devices that can be used for testing, error analysis, and repair of product RM-627. For the correct use of the service devices, and the best effort of workbench setup, please refer to various concepts.

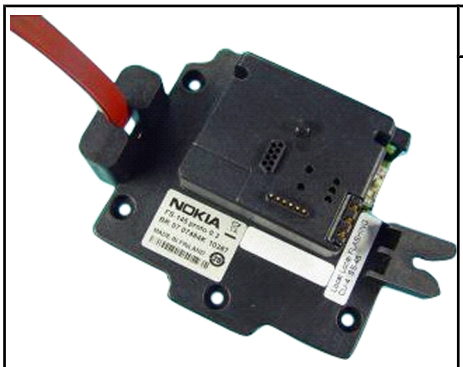	FS-145	Flash adapter	
	• FS-145 is equipped with a clip interlock system • provides standardised interface towards Control Unit • provides RF connection • multiplexing between USB and FBUS media, controlled by VUSB		
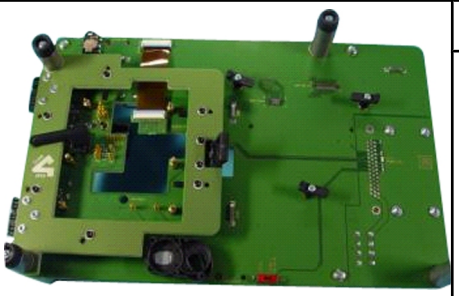	MJ-264	Module jig	
	MJ-264 is meant for component level troubleshooting. The jig includes an RF interface for GSM and WCDMA. In addition, it has the following features: • Provides mechanical interface with the engine module • Provides galvanic connection to all needed test pads in module • Connector for control unit • Access for USB connector		
	SS-88	Camera removal tool	
	The camera removal tool SS-88 is used to remove/attach the camera module from/to the camera socket of the phone PWB.		

General devices

The table below gives a short overview of service devices that can be used for testing, error analysis, and repair of product RM-627. For the correct use of the service devices, and the best effort of workbench setup, please refer to various concepts.

CU-4

CU-4	Control unit	

CU-4 is a general service tool used with a module jig and/or a flash adapter. It requires an external 12 V power supply.

The unit has the following features:

- software controlled via USB
- EM calibration function
- Forwards FBUS/Flashbus traffic to/from terminal
- Forwards USB traffic to/from terminal
- software controlled BSI values
- regulated VBATT voltage
- 2 x USB2.0 connector (Hub)
- FBUS and USB connections supported

When using CU-4, note the special order of connecting cables and other service equipment:

Instructions

1 Connect a service tool (jig, flash adapter) to CU-4.
2 Connect CU-4 to your PC with a USB cable.
3 Connect supply voltage (12 V)
4 Connect an FBUS cable (if necessary).
5 Start Phoenix service software.

Note: Phoenix enables CU-4 regulators via USB when it is started.

Reconnecting the power supply requires a Phoenix restart.

FLS-5	Flash device	

FLS-5 is a dongle and flash device incorporated into one package, developed specifically for POS use.

Note: FLS-5 can be used as an alternative to PK-1.

FPS-21

FPS-21	Flash prommer	

FPS-21 sales package:

- FPS-21 prommer
- AC-35 power supply
- CA-31D USB cable

FPS-21 interfaces:

Front

- Service cable connector

  Provides Flashbus, USB and VBAT connections to a mobile device.
- SmartCard socket

  A SmartCard is needed to allow DCT-4 generation mobile device programming.

Rear

- DC power input

  For connecting the external power supply (AC-35).
- Two USB A type ports (USB1/USB3)

  Can be used, for example, for connecting external storage memory devices or mobile devices
- One USB B type device connector (USB2)

  For connecting a PC.
- Phone connector

  Service cable connection for connecting Flashbus/FLA.
- Ethernet RJ45 type socket (LAN)

  For connecting the FPS-21 to LAN.

Inside

- Four SD card memory slots

  For internal storage memory.

  Note: In order to access the SD memory card slots inside FPS-21, the prommer needs to be opened by removing the front panel, rear panel and heatsink from the prommer body.

	PK-1	Software protection key	
	PK-1 is a hardware protection key with a USB interface. It has the same functionality as the PKD-1 series dongle. PK-1 is meant for use with a PC that does not have a series interface. To use this USB dongle for security service functions please register the dongle in the same way as the PKD-1 series dongle.		
	PKD-1	SW security device	
	SW security device is a piece of hardware enabling the use of the service software when connected to the parallel (LPT) port of the PC. Without the device, it is not possible to use the service software. Printer or any such device can be connected to the PC through the device if needed.		
RJ-230 	RJ-230	Soldering jig	
	RJ-230 is a soldering jig used for soldering and as a rework jig for the engine module.		
	SB-6	Bluetooth test and interface box (sales package)	
	The SB-6 test box is a generic service device used to perform Bluetooth bit error rate (BER) testing, and establishing cordless FBUS connection via Bluetooth. An ACP-8x charger is needed for BER testing and an AXS-4 cable in case of cordless interface usage testing . Sales package includes: • SB-6 test box • Installation and warranty information		

	SB-7	WLAN test box	
	WLAN test requires defined position for the device.		
	SRT-6	Opening tool	
	SRT-6 is used to open phone covers. **Note:** The SRT-6 is included in the Nokia Standard Toolkit.		
	SS-46	Interface adapter	
	SS-46 acts as an interface adapter between the flash adapter and FPS-20/FPS-21.		
	SS-62	Generic flash adapter base for BB5	
	• generic base for flash adapters and couplers • SS-62 equipped with a clip interlock system • provides standardised interface towards Control Unit • multiplexing between USB and FBUS media, controlled by VUSB		
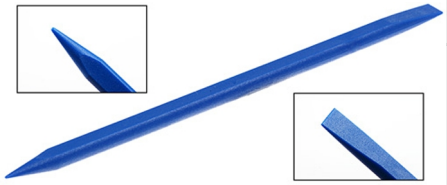	SS-93	Opening tool	
	SS-93 is used for opening JAE connectors. **Note:** The SS-93 is included in Nokia Standard Toolkit.		

	SX-4	Smart card	
	SX-4 is a BB5 security device used to protect critical features in tuning and testing. SX-4 is also needed together with FPS-20/FPS-21 when DCT-4 phones are flashed.		

Cables

The table below gives a short overview of service devices that can be used for testing, error analysis, and repair of product RM-627. For the correct use of the service devices, and the best effort of workbench setup, please refer to various concepts.

	CA-101	Micro USB cable	
	The CA-101 is a USB-to-microUSB data cable that allows connections between the PC and the phone.		
	CA-31D	USB cable	
	The CA-31D USB cable is used to connect FPS-20/FPS-21 to a PC. It is included in the FPS-20/FPS-21 sales packages.		
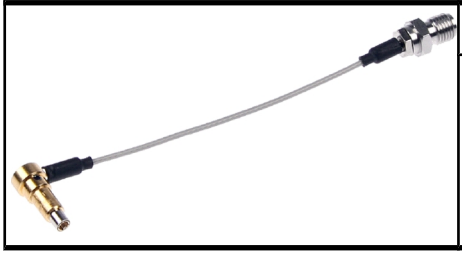	CA-56RS	RF cable	
	Small RF cable that is used for RF tuning with product specific module jig.		

	CA-89DS	Cable	
	Provides VBAT and Flashbus connections to mobile device programming adapters.		
	DAU-9S	MBUS cable	
	The MBUS cable DAU-9S has a modular connector and is used, for example, between the PC's serial port and module jigs, flash adapters or docking station adapters. **Note:** Docking station adapters valid for DCT4 products.		
	PCS-1	Power cable	
	The PCS-1 power cable (DC) is used with a docking station, a module jig or a control unit to supply a controlled voltage.		

	XRS-6	RF cable	
	The RF cable is used to connect, for example, a module repair jig to the RF measurement equipment. SMA to N-Connector approximately 610 mm. Attenuation for: • GSM850/900: 0.3+-0.1 dB • GSM1800/1900: 0.5+-0.1 dB • WCDMA/WLAN: 0.6+-0.1dB		

Service concepts

POS (Point of Sale) flash concept

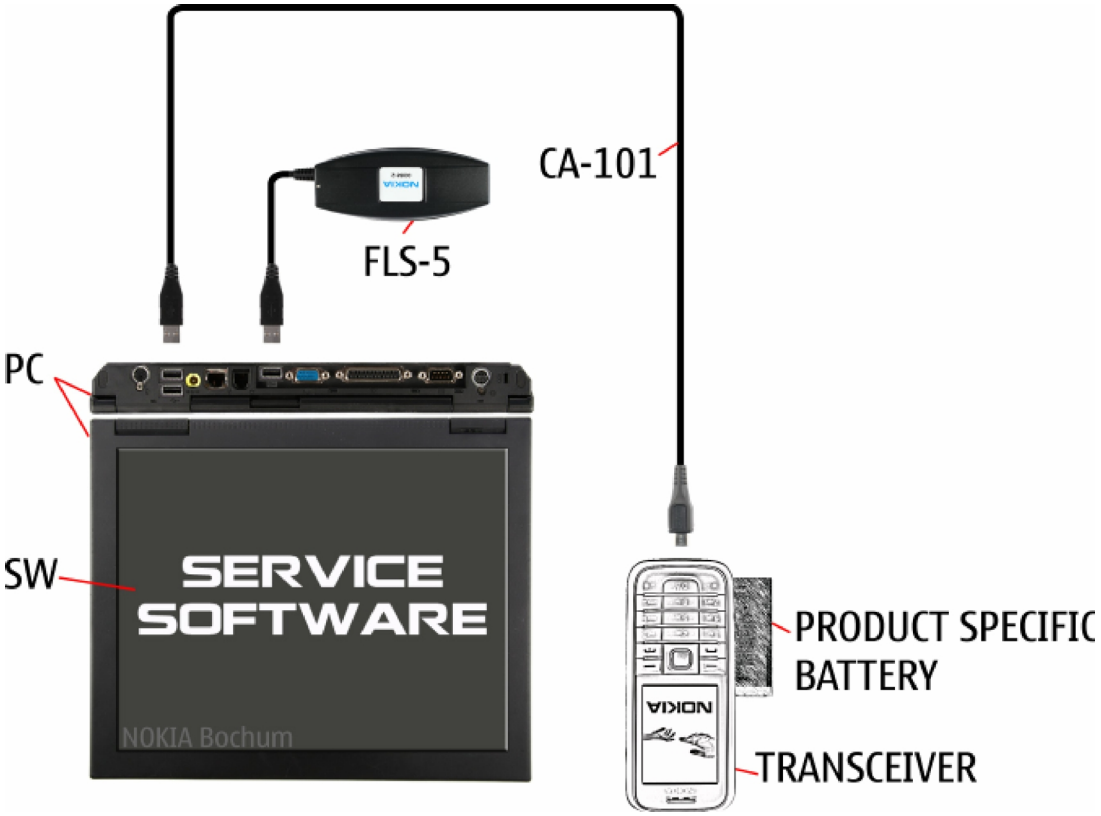

Figure 2 POS flash concept

Type	Description
Product specific tools	
BL-5F	Battery
Other tools	
FLS-5	POS flash dongle
	PC with Phoenix service software

Type	Description
Cables	
CA-101	Micro USB cable

Flash concept with FPS-21

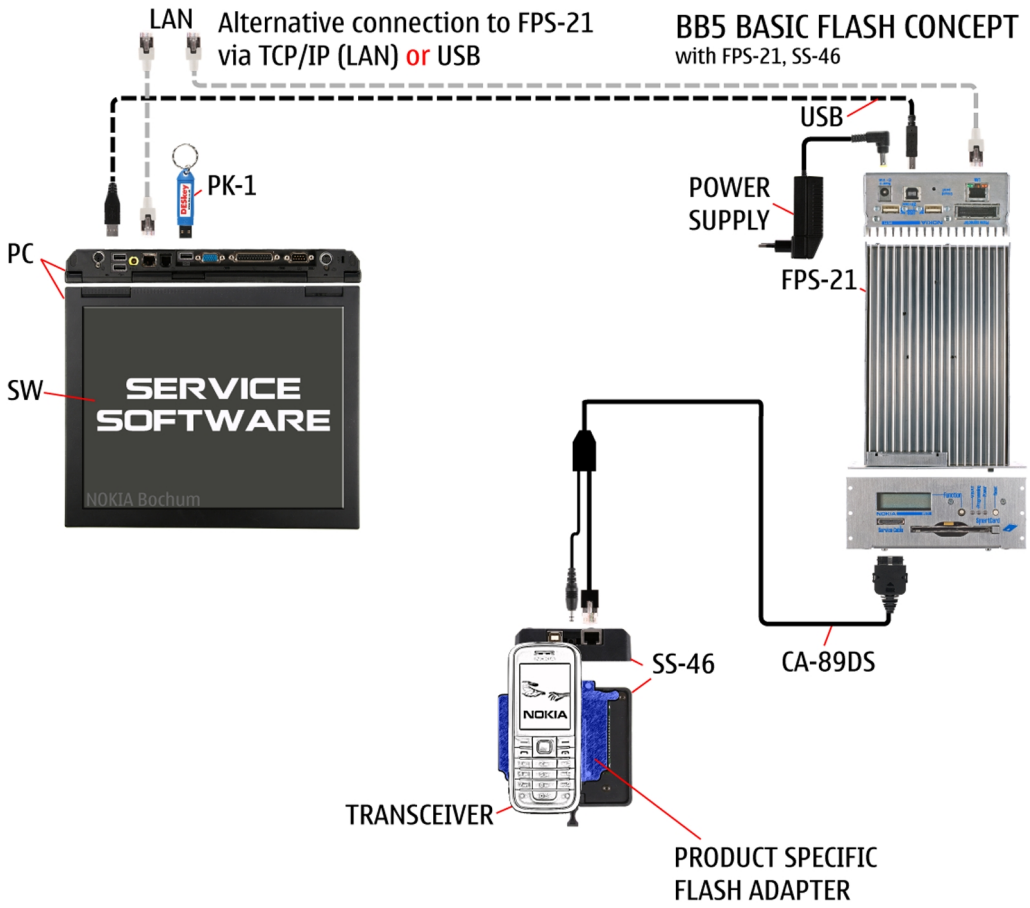

Figure 3 Basic flash concept with FPS-21

Type	Description
Product specific devices	
FS-145	Flash adapter
Other devices	
FPS-21	Flash prommer box
AC-35	Power supply
PK-1	SW security device
SS-46	Interface adapter
	PC with Phoenix service software
Cables	
CA-89DS	Service cable

Type	Description
	USB cable

CU-4 flash concept with FPS-21

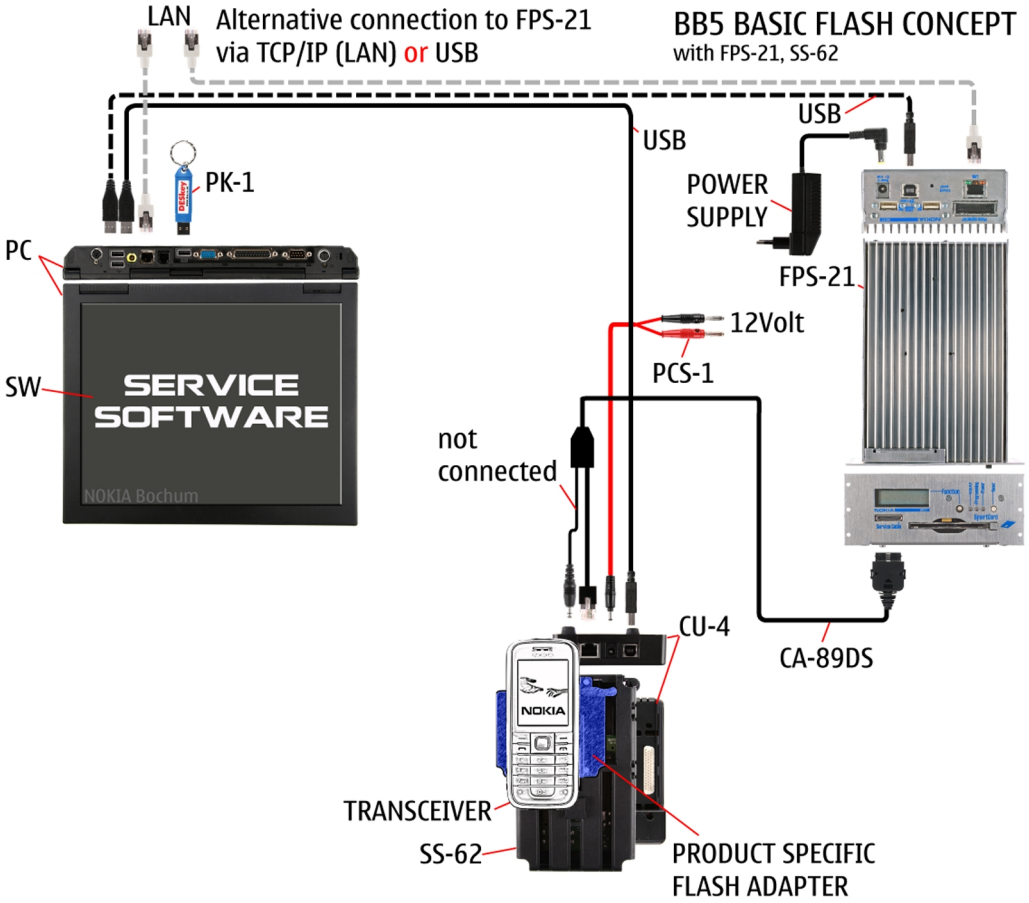

Figure 4 CU-4 flash concept with FPS-21

Type	Description
Product specific devices	
FS-145	Flash adapter
Other devices	
CU-4	Control unit
FPS-21	Flash prommer box
AC-35	Power supply
PK-1	SW security device
SS-62	Flash adapter base
SX-4	Smart card (for DCT-4 generation mobile device programming)
	PC with Phoenix service software
Cables	

Type	Description
PCS-1	Power cable
CA-89DS	Service cable
	Standard USB cable
	USB cable

Module jig service concept

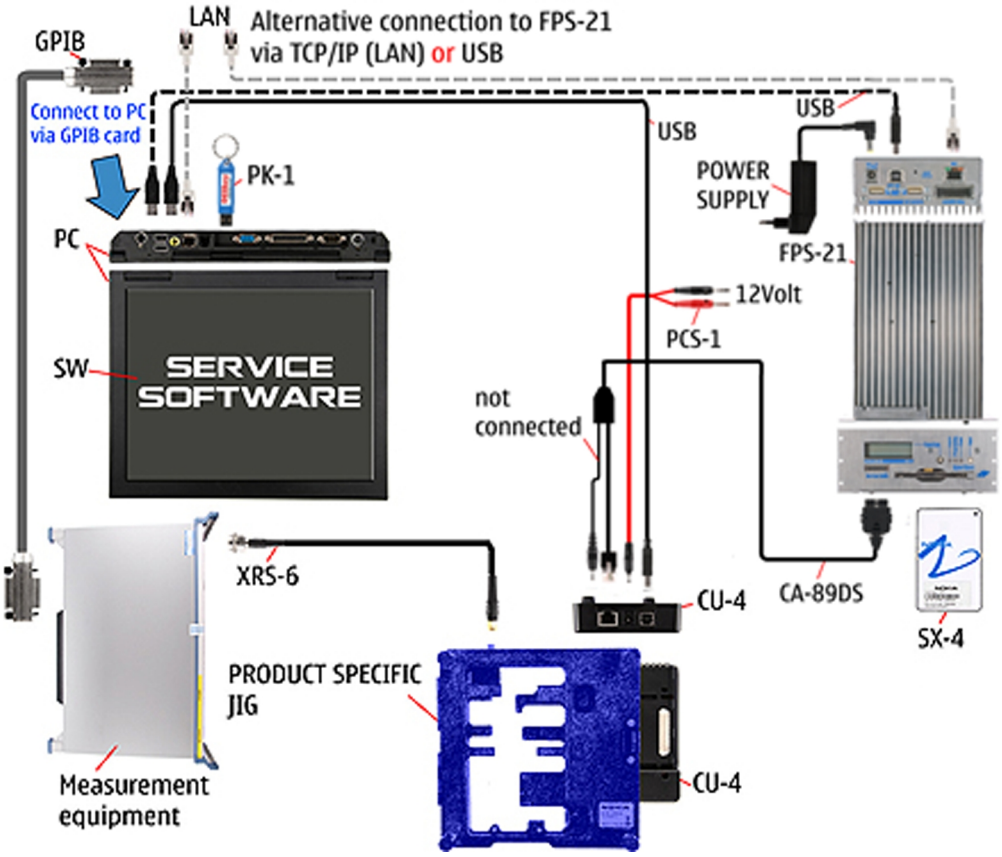

Figure 5 Module jig service concept

Type	Description
Phone specific devices	
MJ-264	Module jig
Other devices	
CU-4	Control unit
FPS-21	Flash prommer box
PK-1/PKD-1	SW security device
SX-4	Smart card
	PC with VPOS and Phoenix service software
	Measurement equipment

Type	Description
Cables	
CA-89DS	Service cable
PCS-1	DC power cable
XRS-6	RF cable
	USB cable
	GPIB control cable

Service concept for RF testing and RF/BB tuning

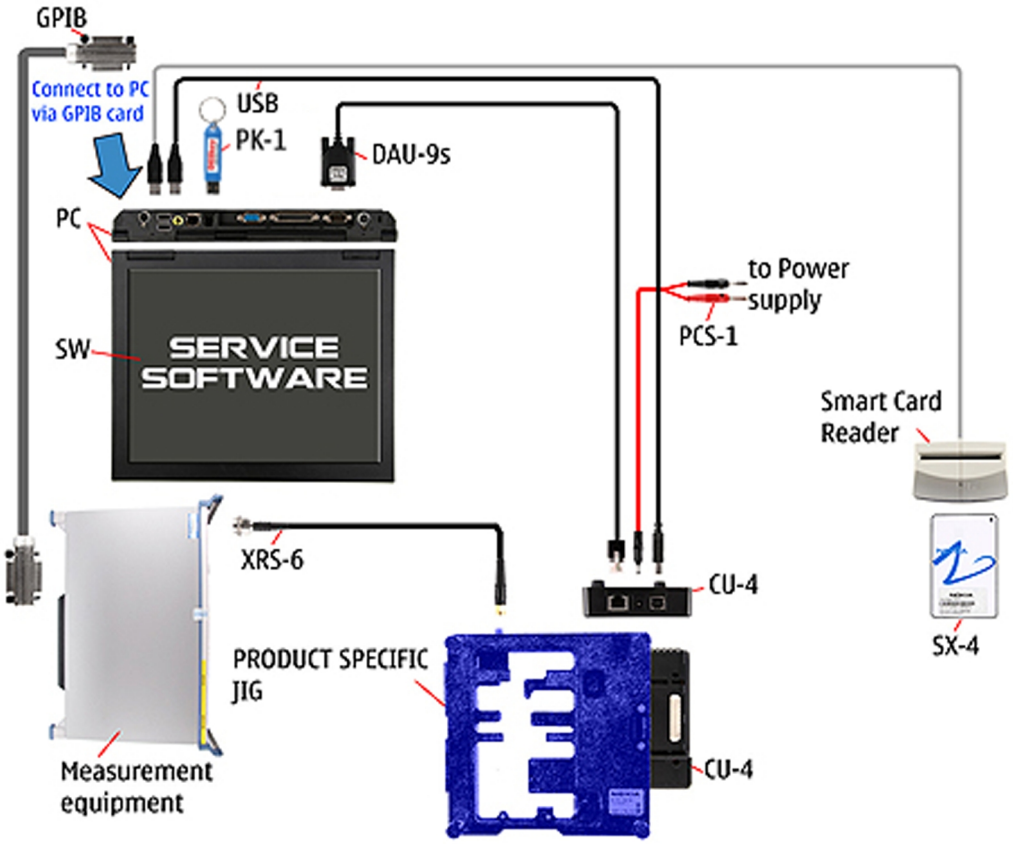

Figure 6 Service concept for RF testing and RF/BB tuning

Type	Description
Product specific devices	
MJ-264	Module jig
Other devices	
CU-4	Control unit
PK-1	SW security device
SX-4	Smart card
	Measurement equipment

Type	Description
	Smart card reader
	PC with Phoenix service software
Cables	
DAU-9S	MBUS cable
PCS-1	DC power cable
XRS-6	RF cable
	GPIB control cable
	USB cable

Bluetooth testing concept with SB-6

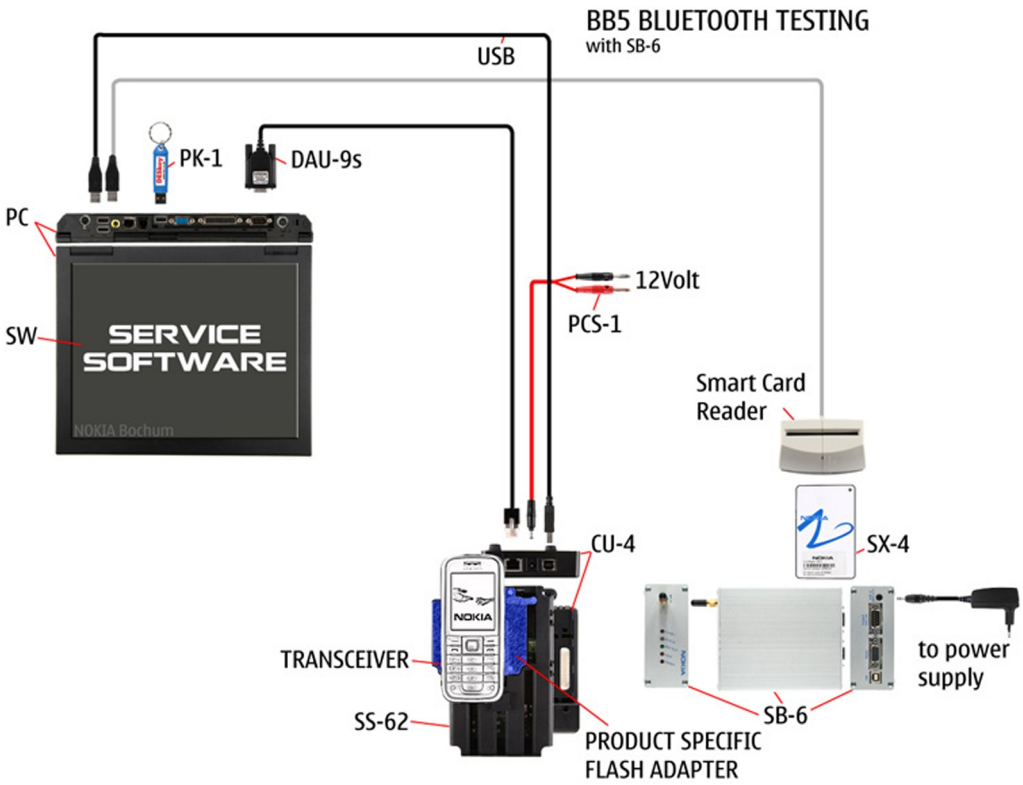

Figure 7 Service concept for RF testing and RF/BB tuning

Type	Description
Product specific devices	
FS-145	Flash adapter
Other devices	
CU-4	Control unit
SS-62	Flash adapter base
PK-1	SW security device
SX-4	Smart card

Type	Description
SB-6	Bluetooth test and interface box
	Smart card reader
	PC with Phoenix service software
Cables	
DAU-9S	MBUS cable
PCS-1	DC power cable
	USB cable

WLAN functionality testing concept with SB-7

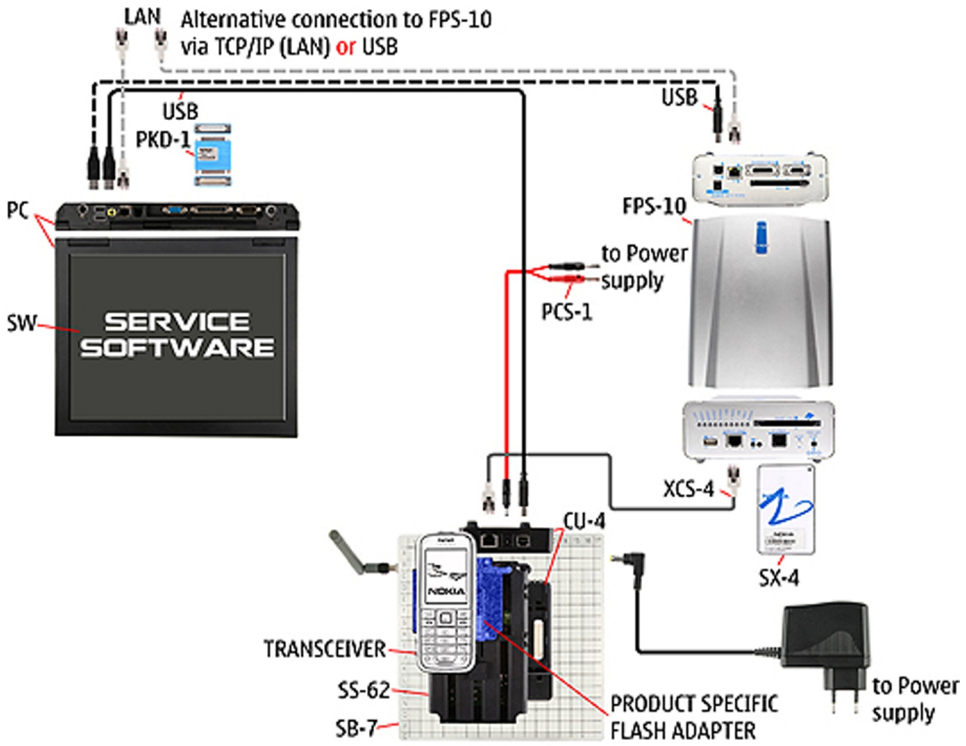

Figure 8 WLAN functionality testing concept with SB-7

Type	Description
Product specific tools	
FS-145	Flash adapter
Other tools	
CU-4	Control unit
PCS-1	DC power cable
PK-1	SW Security device **Note:** PK-1 can be used instead of PKD-1.
SS-62	Generic base adapter
Cables	

Type	Description
PCS-1	Power cable
DAU-9S	Cable
	Standard USB cable

(This page left intentionally blank.)

3 — BB Troubleshooting and Manual Tuning Guide

(This page left intentionally blank.)

Table of Contents

List of Tables

List of Figures

Baseband self tests in Phoenix

Context

Always start the troubleshooting procedure by running the Phoenix self tests. If a test fails, please follow the diagram below.

If the phone is dead and you cannot perform the self tests, go to Dead or jammed device troubleshooting (page 3–7) .

Troubleshooting flow

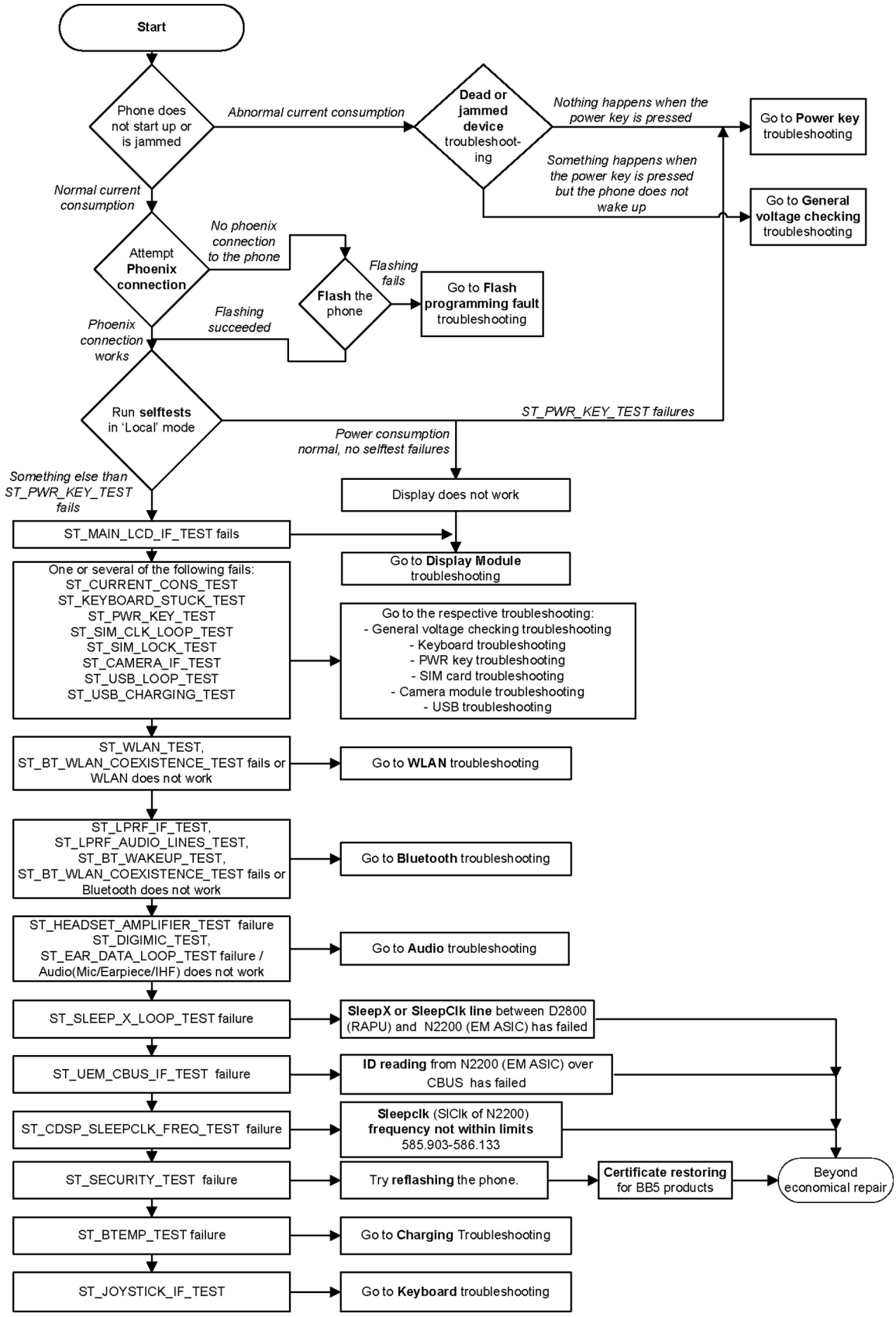

Power and charging troubleshooting

Dead or jammed device troubleshooting

Troubleshooting flow

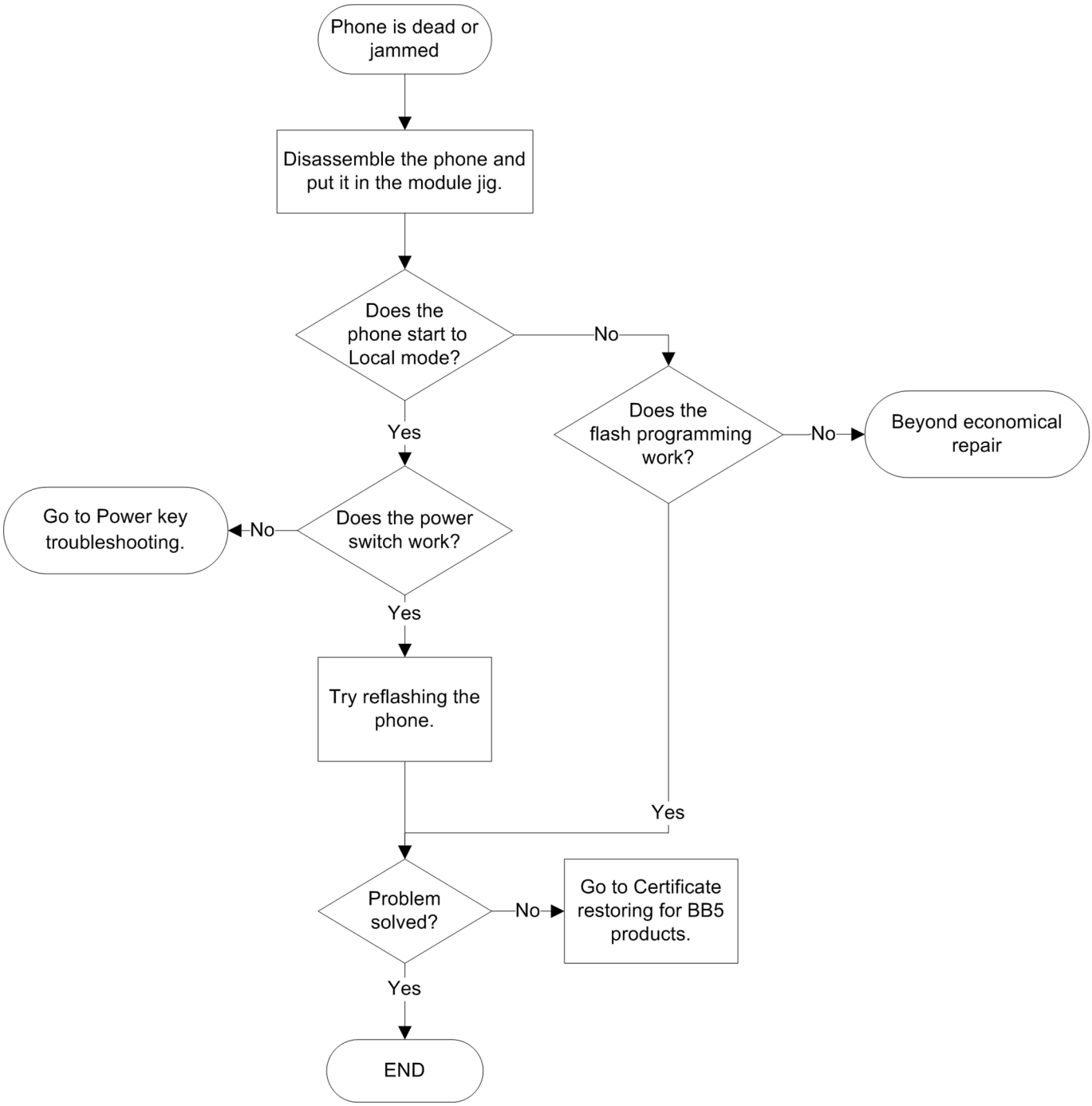

Power key troubleshooting

Troubleshooting flow

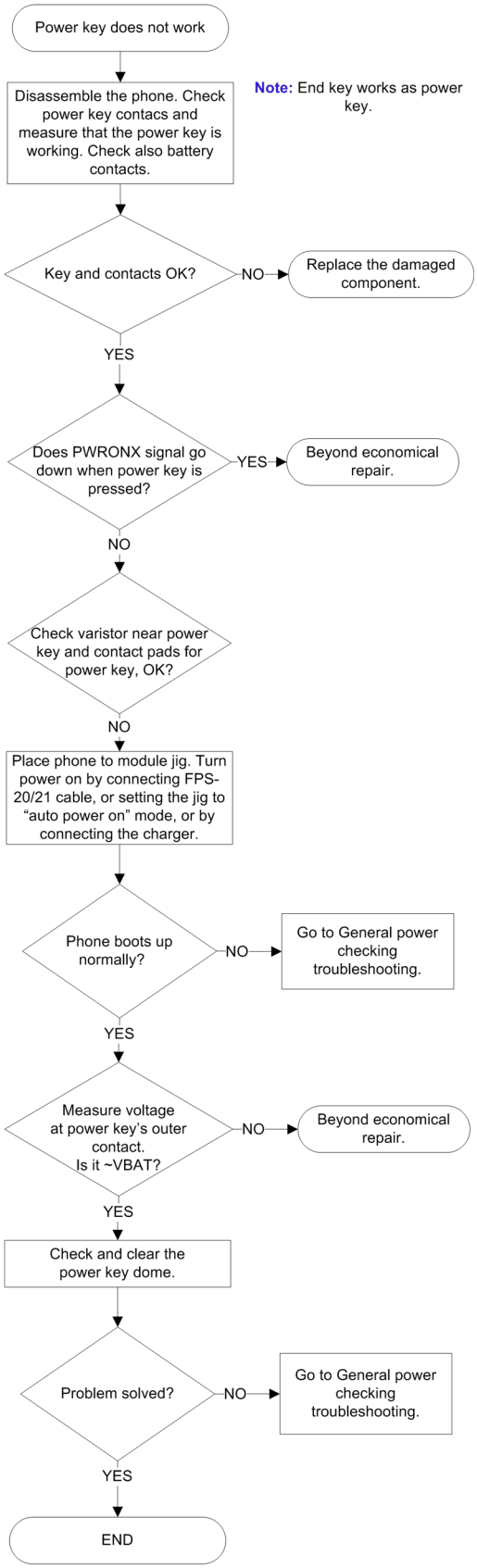

General voltage checking troubleshooting

Troubleshooting flow

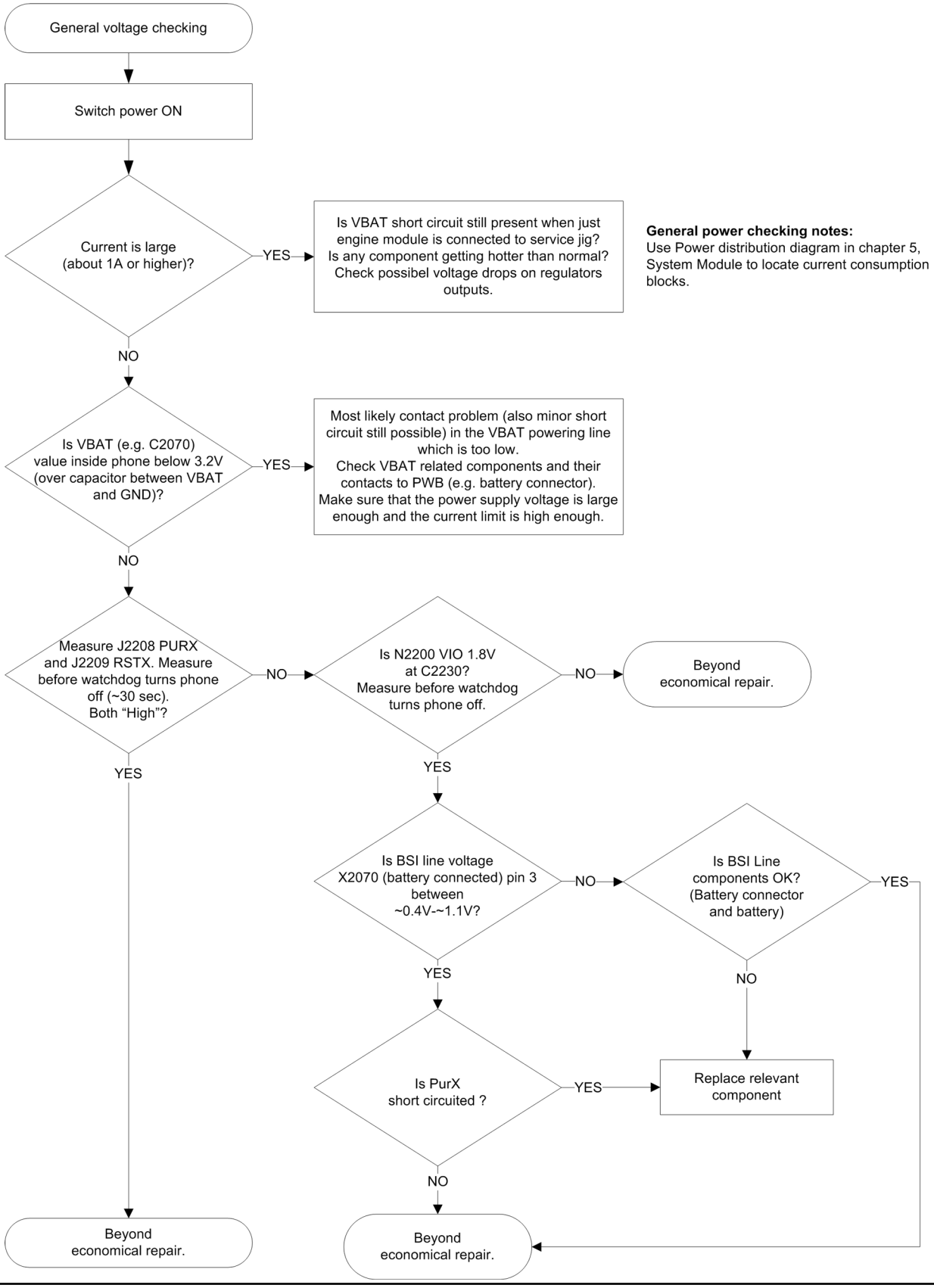

General power checking

Check the following voltages:

Signal Rename	Regulator	Sleep	Idle	Nominal voltage	Main user	Notes
VIO	Pearl/Gazoo	ON	ON	1.8	Memory, I/Os, Display	
VBACK	Pearl/Gazoo	ON	ON	2.5	Back-up battery	
VSIM1	Pearl/Gazoo	ON	ON	1.8/3.0	SIM card	
VAUX1	Pearl/Gazoo	ON	ON	2.8	TV-OUT, MR, Display	
VAUX2	Pearl/Gazoo	OFF	OFF	2.5	ALS	
VANA	Pearl/Gazoo	ON	ON	2.5	Audio	
VR1	Pearl/Gazoo	OFF	ON	2.5	Crystal oscillators	
VRFC	Pearl/Gazoo	OFF	ON	1.8	RAPU converters	
VRCP1	Pearl/Gazoo			4.75	To RF parts	
VREF	Pearl/Gazoo	ON	ON	1.25	RF reference	
VCORE	Pearl/Gazoo	ON	ON	1.2	RAPU digital	Can change due to RAPU version & SW
VOUT	Pearl/Gazoo	OFF	OFF	2.5	Video switch	
VCAM_2V8	N1421	OFF	OFF	2.8	Camera	Disabled in sleep
VCAM_1V8	N1420	OFF	OFF	1.800	Camera	Disabled in sleep
VMEM	Pearl/Gazoo	OFF	OFF	2.9	microSD	Disabled in sleep

USB charging troubleshooting

Context

For instructions regarding USB charging troubleshooting, see section USB charging troubleshooting (page 3–20) .

Clocking troubleshooting

Troubleshooting flow

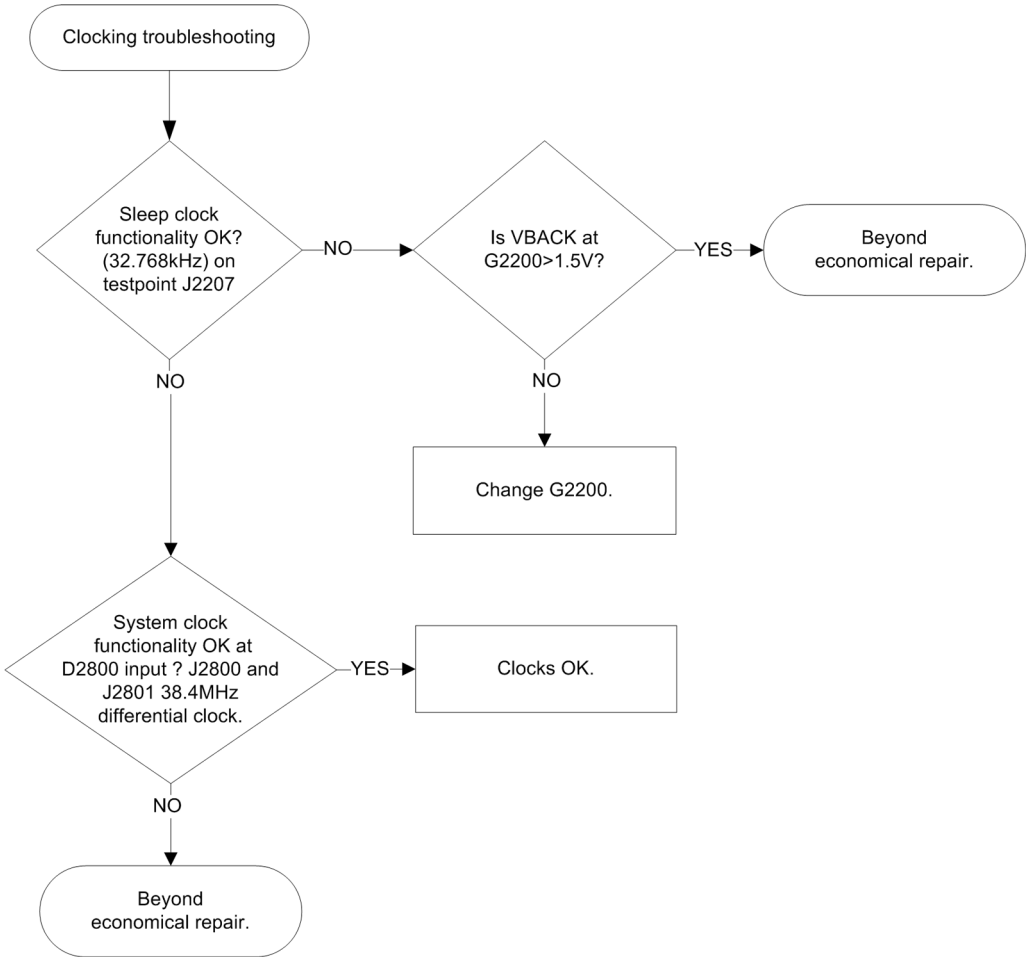

Interface troubleshooting

Flash programming fault troubleshooting

Troubleshooting flow - Page 1 of 2

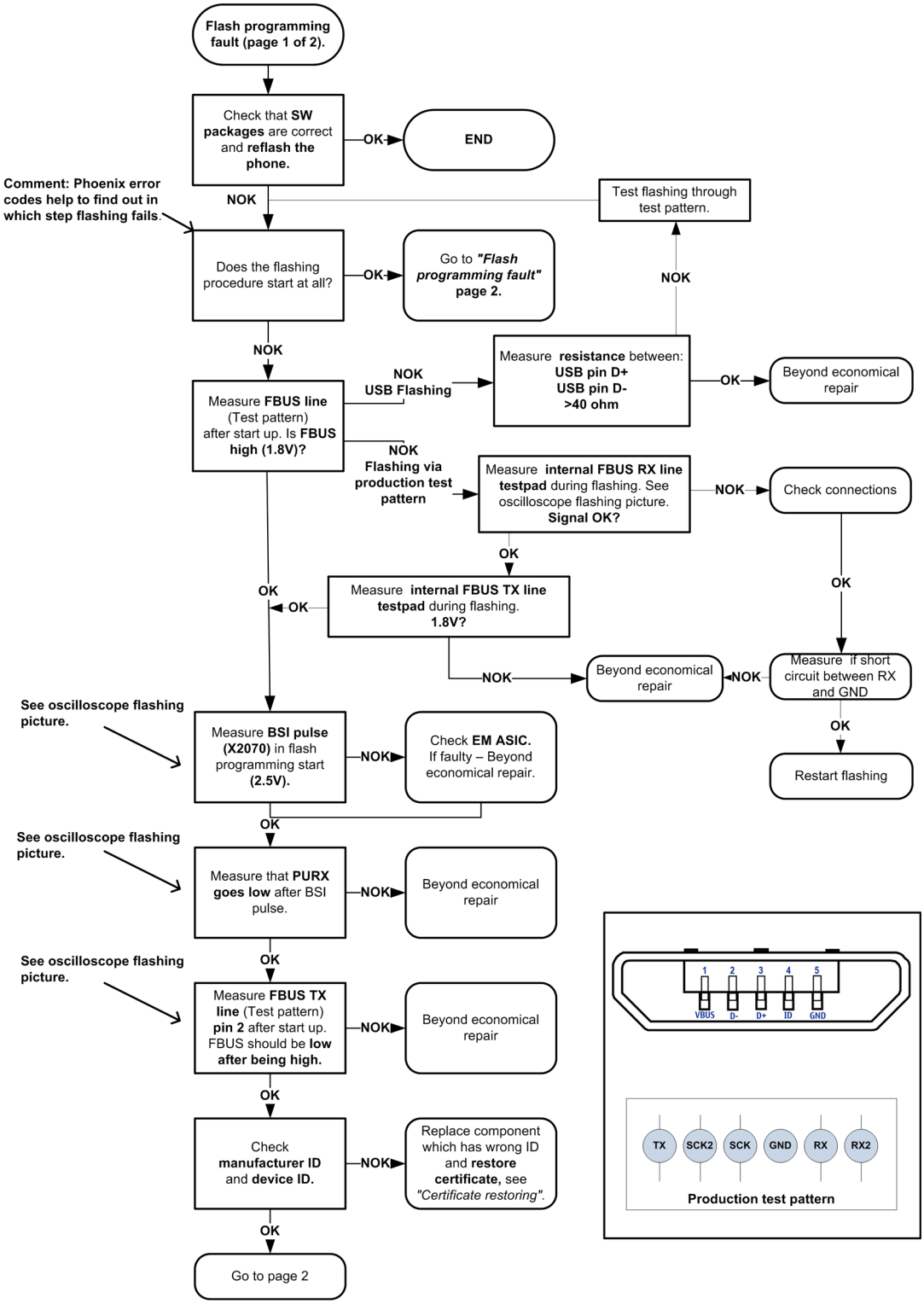

Troubleshooting flow - Page 2 of 2

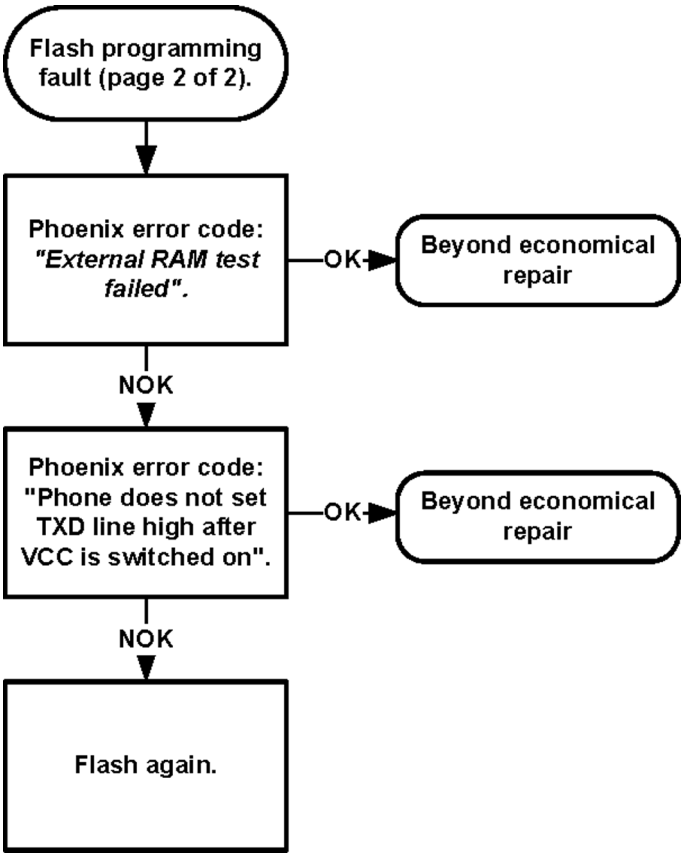

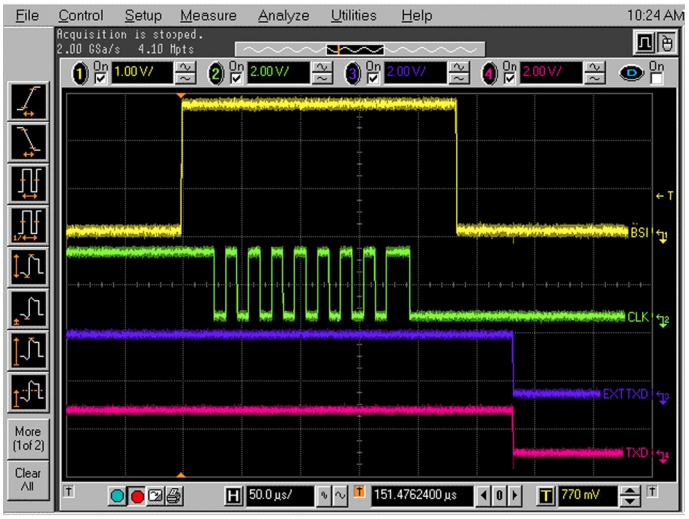

Figure 9 Flashing pic 1. Take single trig measurement for the rise of the BSI signal

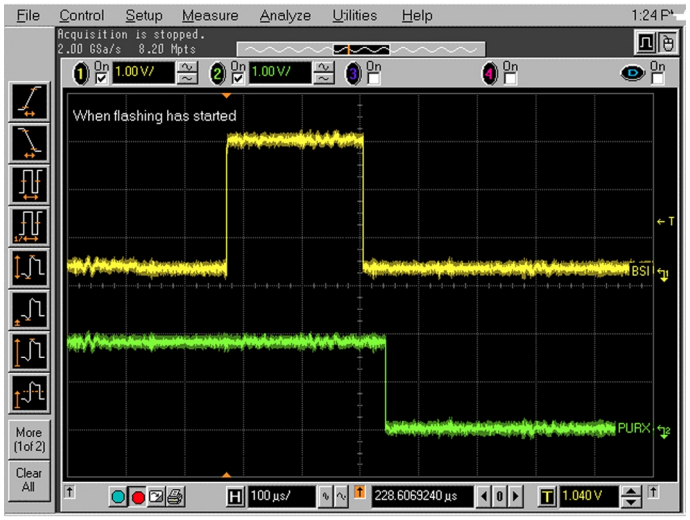

Figure 10 Flashing pic 2. Take single trig measurement for the rise of the BSI signal

SIM card troubleshooting

Troubleshooting flow

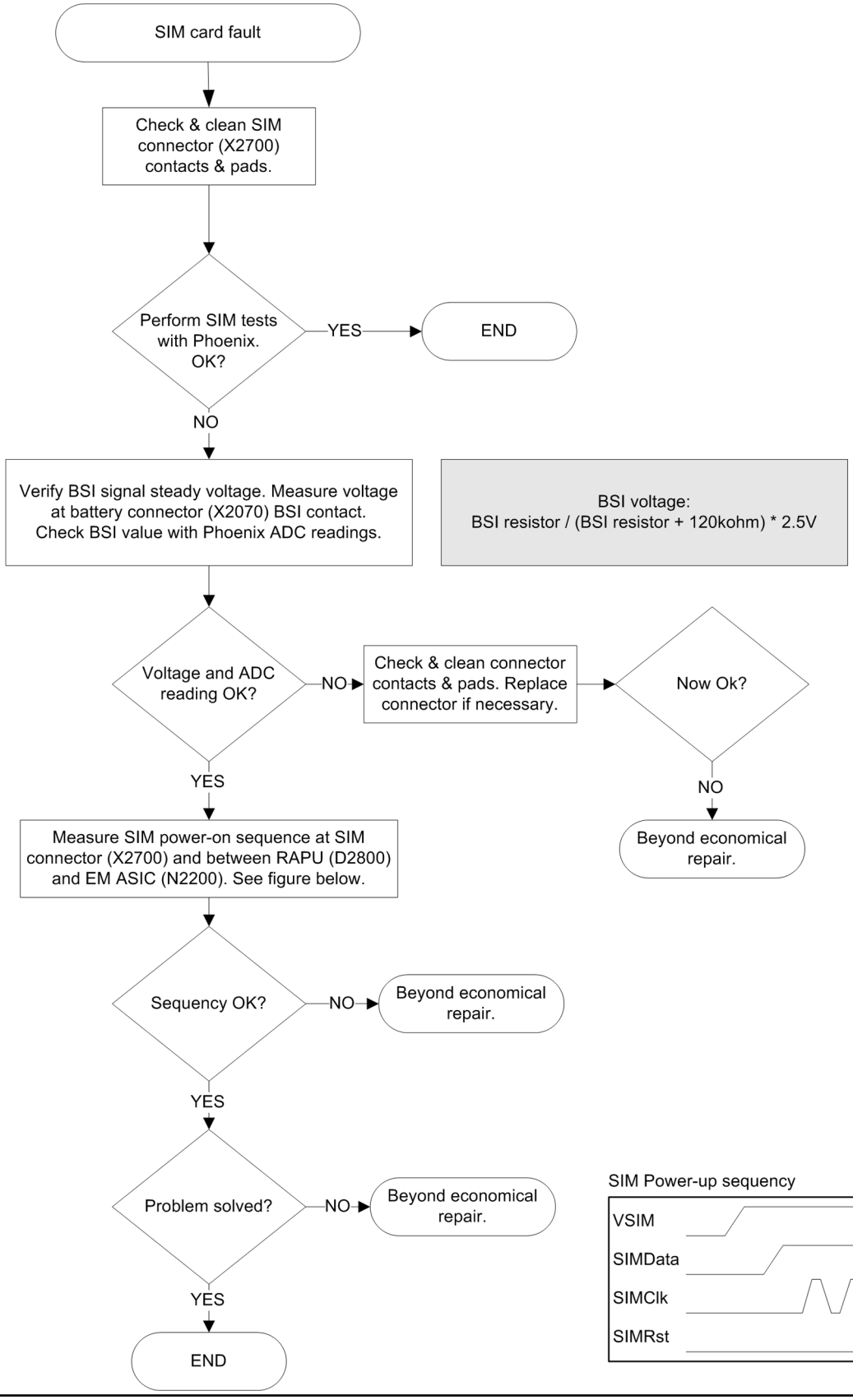

SIM power-on sequence

Testpoints between
RAPU and EM ASIC
J2218 = SIMData
J2219 = SIMClk
J2220 = SIMIOC

Fsimclk = 3.8MHz

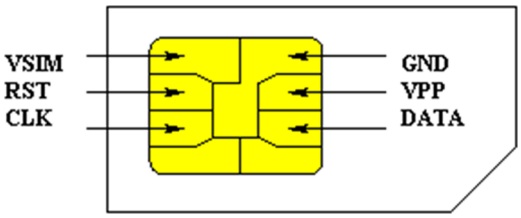

SIM contacts

SIM power-on sequence on X2700.

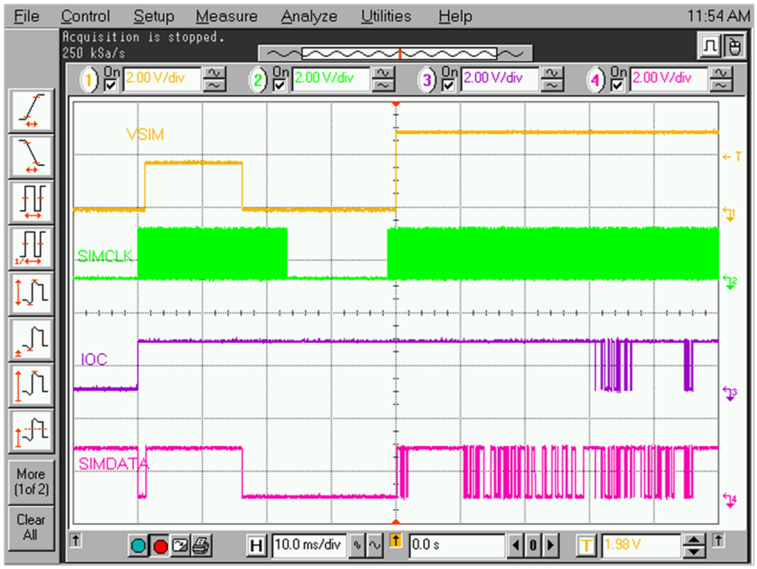

SIM power-on sequence between RAPU and EM ASIC.

MicroSD card troubleshooting

Troubleshooting flow

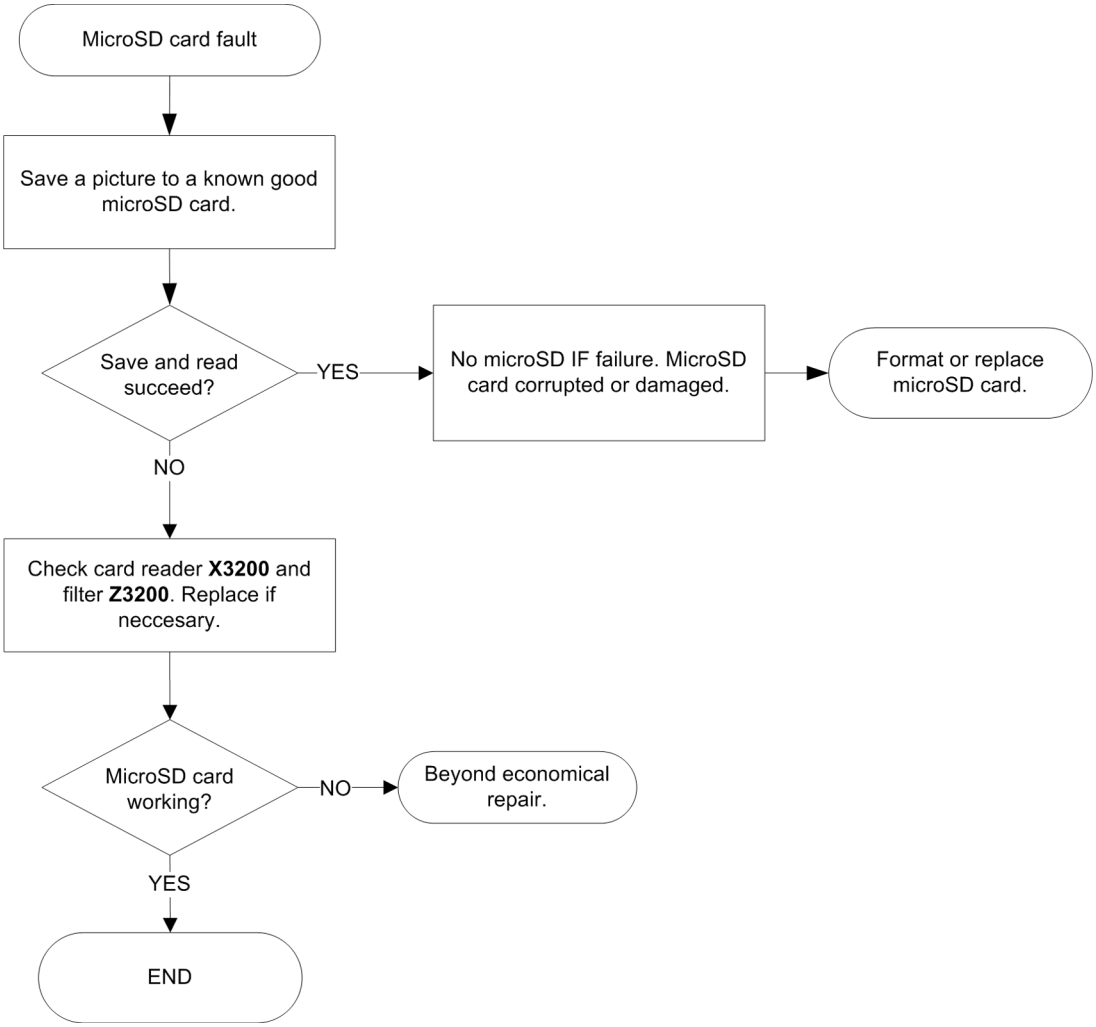

USB troubleshooting

USB data interface troubleshooting

Troubleshooting flow - Page 1 of 2

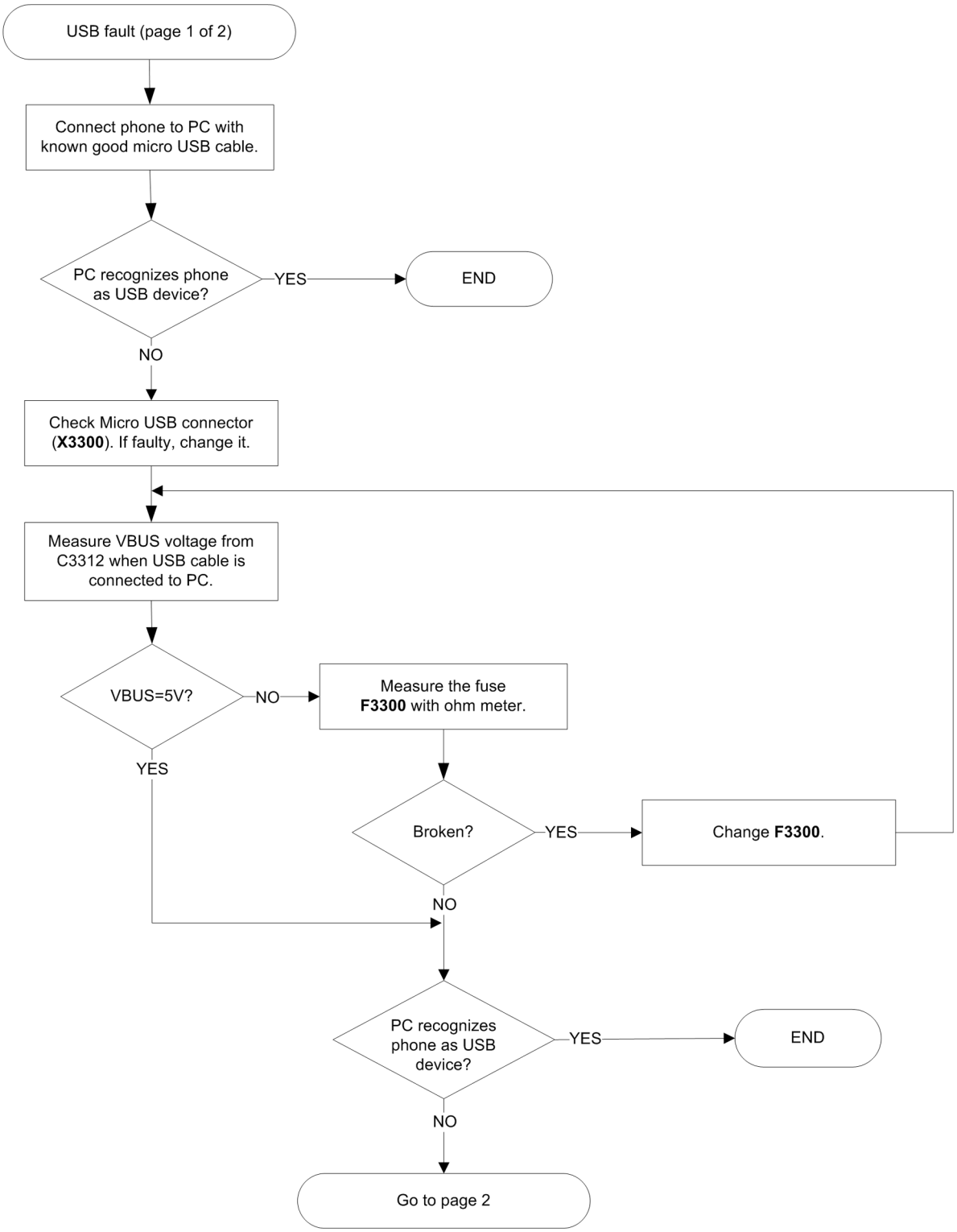

Troubleshooting flow - Page 2 of 2

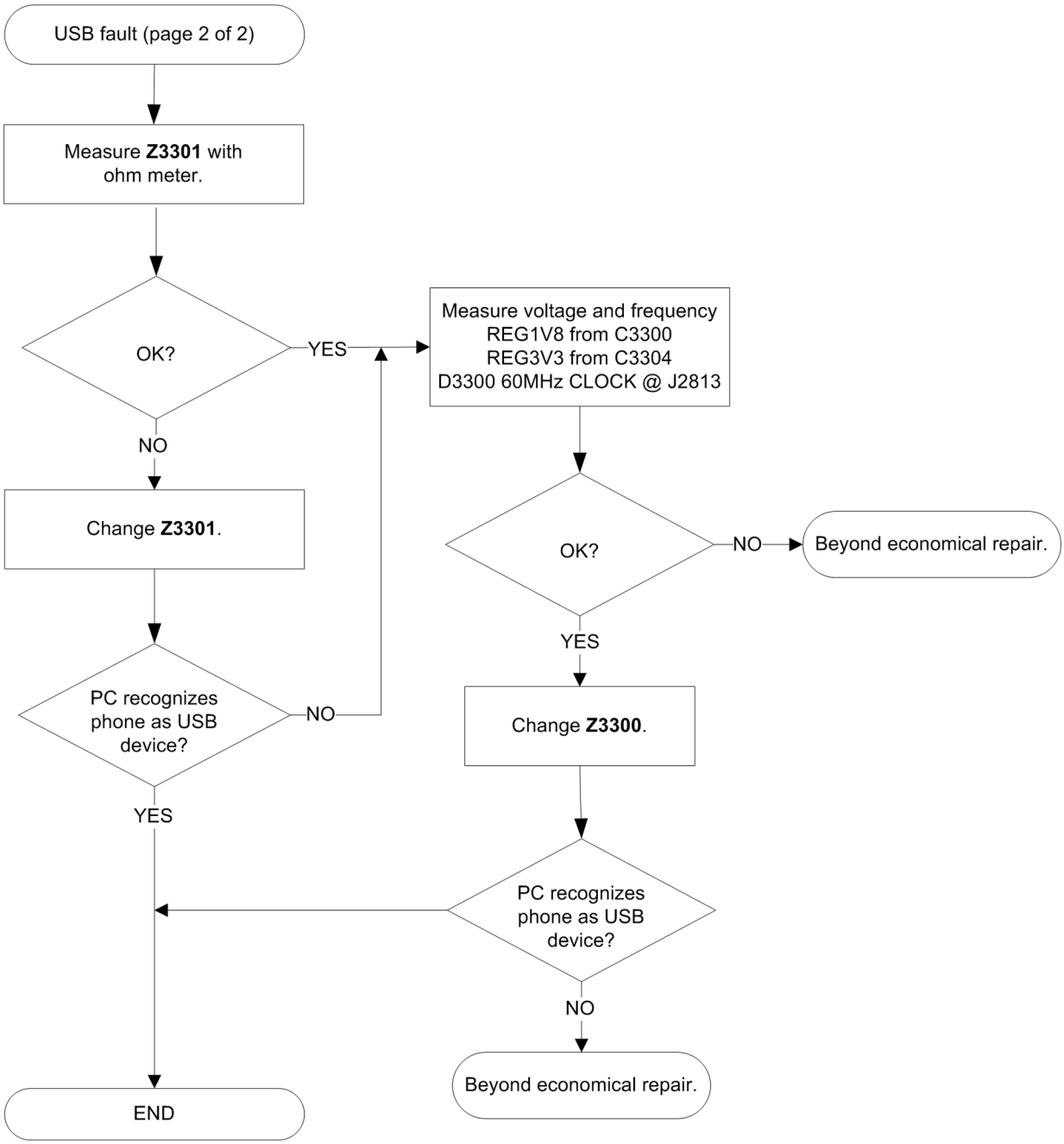

USB charging troubleshooting

Troubleshooting flow

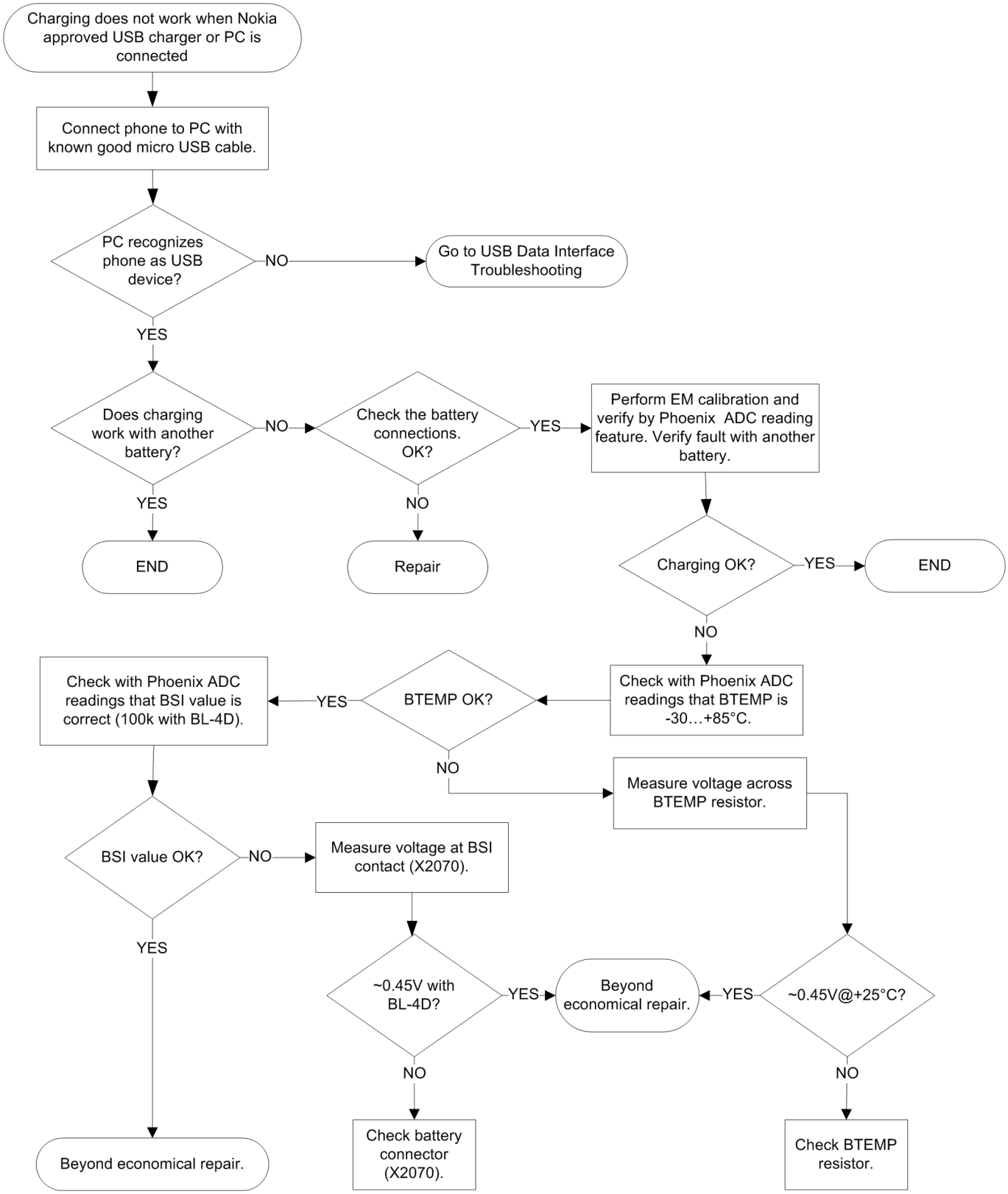

User interface troubleshooting

Keyboard troubleshooting

Context

There are two possible failure modes in the keyboard:

- One or more keys are stuck, so that the key does not react when a keydome or a side key is pressed. This kind of failure is caused by mechanical reasons (dirt, rust, mechanical damage, etc.).
- Malfunction of several keys at the same time. This happens when one or more rows or columns in the key matrix are failing (shortcut or open connection).

If the failure mode is not clear, start with the Keyboard test in Phoenix.

Troubleshooting flow

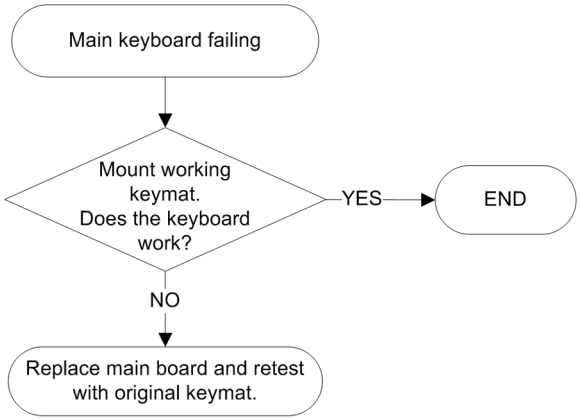

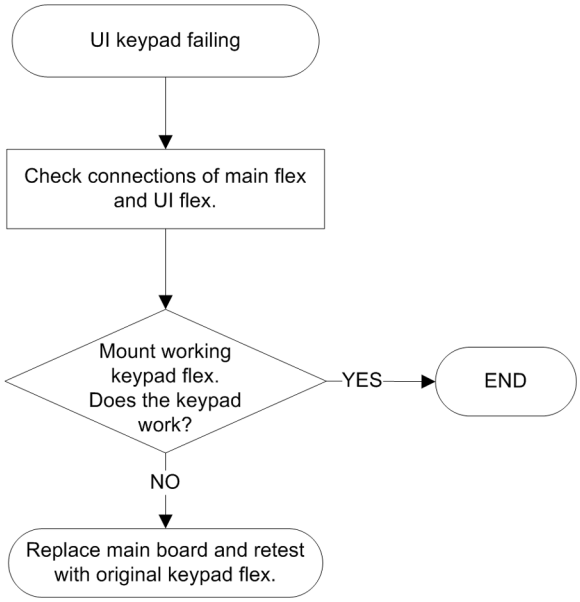

Keypad LEDs troubleshooting

Troubleshooting flow

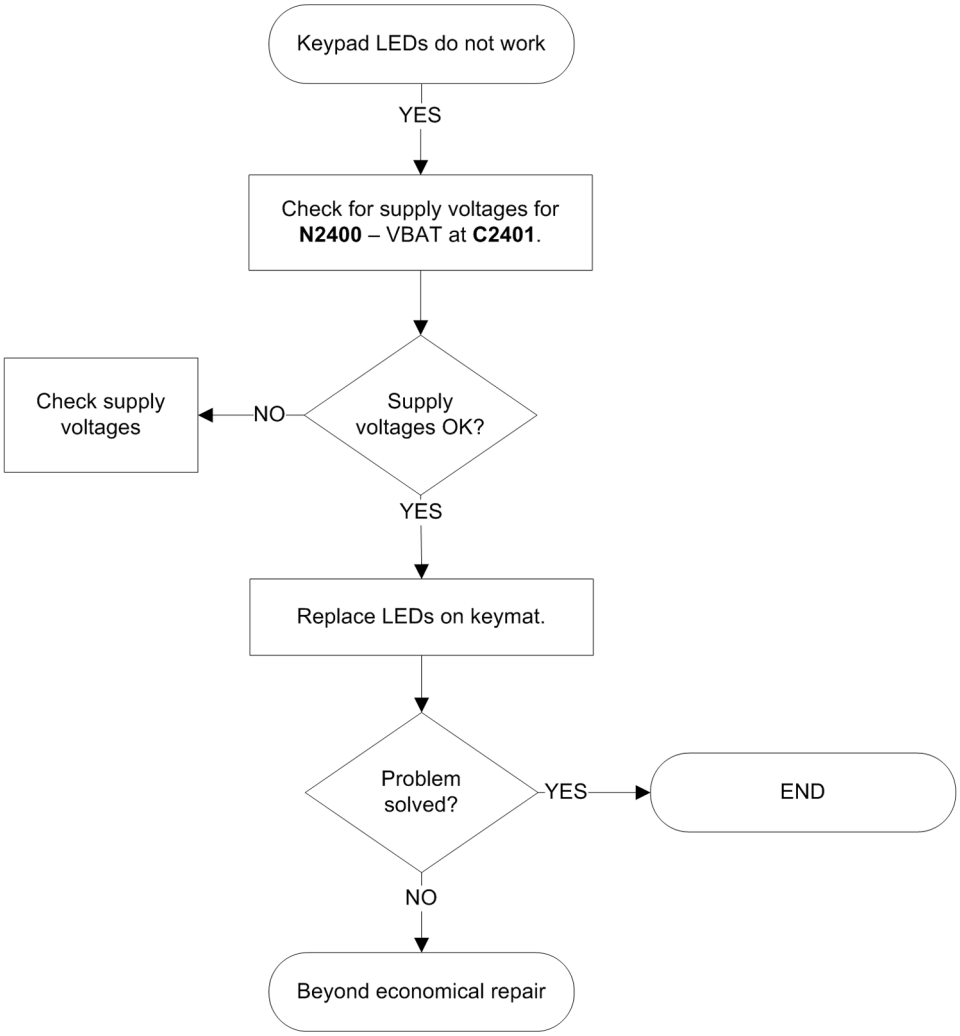

MR sensor troubleshooting

Troubleshooting flow

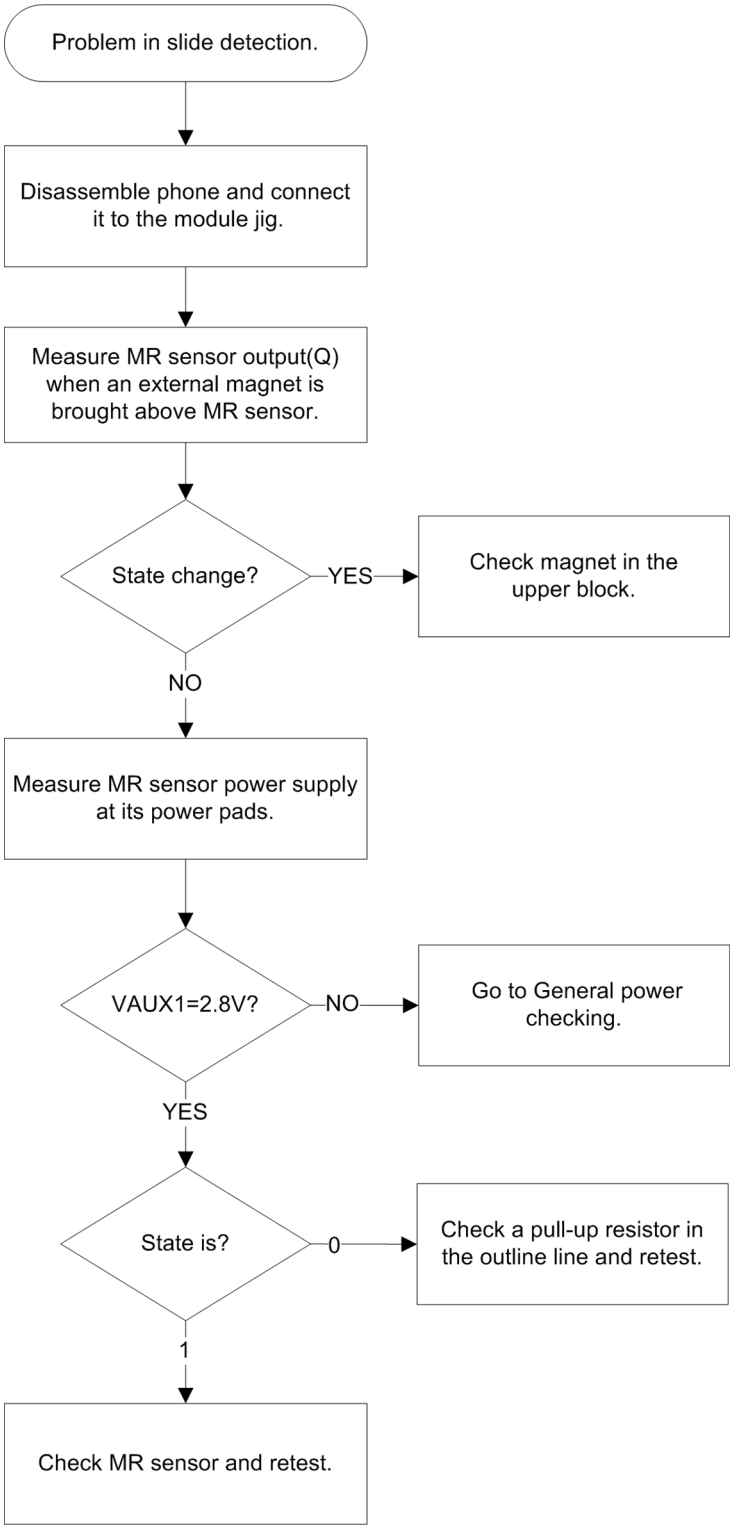

Accelerometer self test troubleshooting

Context

The accelerometer is sensitive to all vibrations and movements (including those made by IHF and Vibra). Make sure before starting the troubleshooting that there are no vibrations or movements which could have an impact on the analysis.

The three different axes for the accelerometer are illustrated in the picture below.

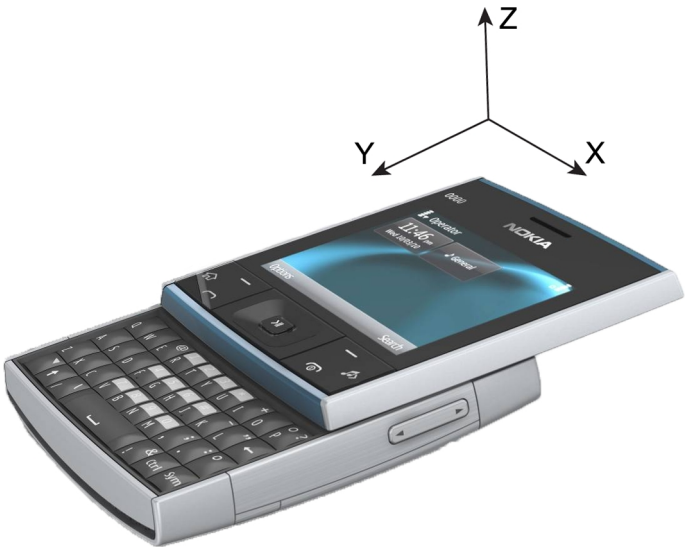

Figure 11 Accelerometer axes

Troubleshooting flow

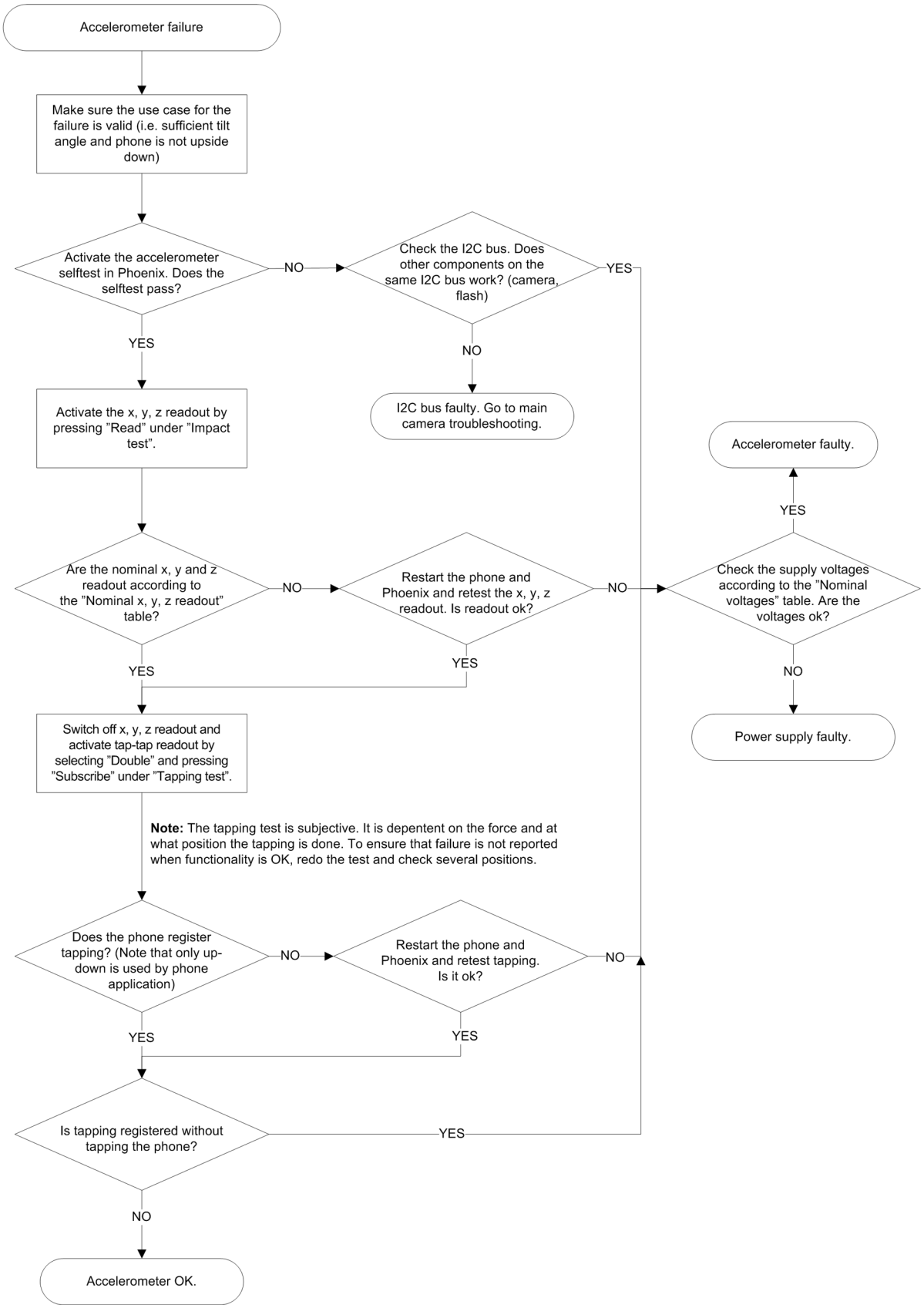

Symptoms and diagnosis

Table 5 Nominal x, y, z readout

Position	Nominal readout X	Nominal readout Y	Nominal readout Z
Phone lying flat on table. Display up.	0.0	0.0	1.0
Phone lying flat on table. Display down.	0.0	0.0	-1.0
Holding the phone vertically	0.0	1.0	0.0
Holding the phone right side down	-1.0	0.0	0.0

The impact test is done with the phone in four different positions to test all axes. The table presents the nominal value readout value for x, y and z axis in the different phone positions. Tolerance +/- 0.9

Table 6 Nominal voltages

Supply	Measure on	Nominal voltage
VAUX2	C6503	2.5 V
VIO	C6504	1.8 V

Display module troubleshooting

General instructions for display troubleshooting

Context

- The display is in a normal mode when the phone is in active use.
- The operating modes of the display can be controlled with the help of *Phoenix*.

Table 7 Display module troubleshooting cases

Display blank	There is no image on the display. The display looks the same when the phone is on as it does when the phone is off. The backlight can be on in some cases.
Image on the display not correct	Image on the display can be corrupted or a part of the image can be missing. • If a part of the image is missing, change the display module. • If the image is otherwise corrupted, follow the display fault troubleshooting flowchart.
Backlight dim or not working at all	Backlight LED components are inside the display module. Backlight failure can also be in the connector or in the backlight power source in the main engine of the phone. This means that in case the display is working (image OK), the backlight is faulty.

Visual defects (pixel)	Pixel defects can be checked by controlling the display with Phoenix. Use both colours, black and white, on a full screen. The display may have some random pixel defects that are acceptable for this type of display. The criteria when pixel defects are regarded as a display failure, resulting in a replacement of the display, are presented the following table.

Table 8 Pixel defects

Item		White dot defect				Black dot defect	Total
1	Defect counts	R	G	B	White Dot Total	1	1
		1	1	1	1		
2	Combined defect counts	Not allowed. Two single dot defects that are within 5 mm of each other should be interpreted as combined dot defect.					

Steps

1. Verify with a working display that the fault is not on the display module itself.

   The display module cannot be repaired.
2. Check that the cellular engine is working normally.
   - i To check the functionality, connect the phone to a docking station.
   - ii Start *Phoenix* service software.
   - iii Read the phone information to check that also the application engine is functioning normally (you should be able to read the APE ID).
3. Proceed to the display fault troubleshooting flowchart.

   Use the **Display Test** tool in *Phoenix* to find the detailed fault mode.

Display fault troubleshooting

Troubleshooting flow

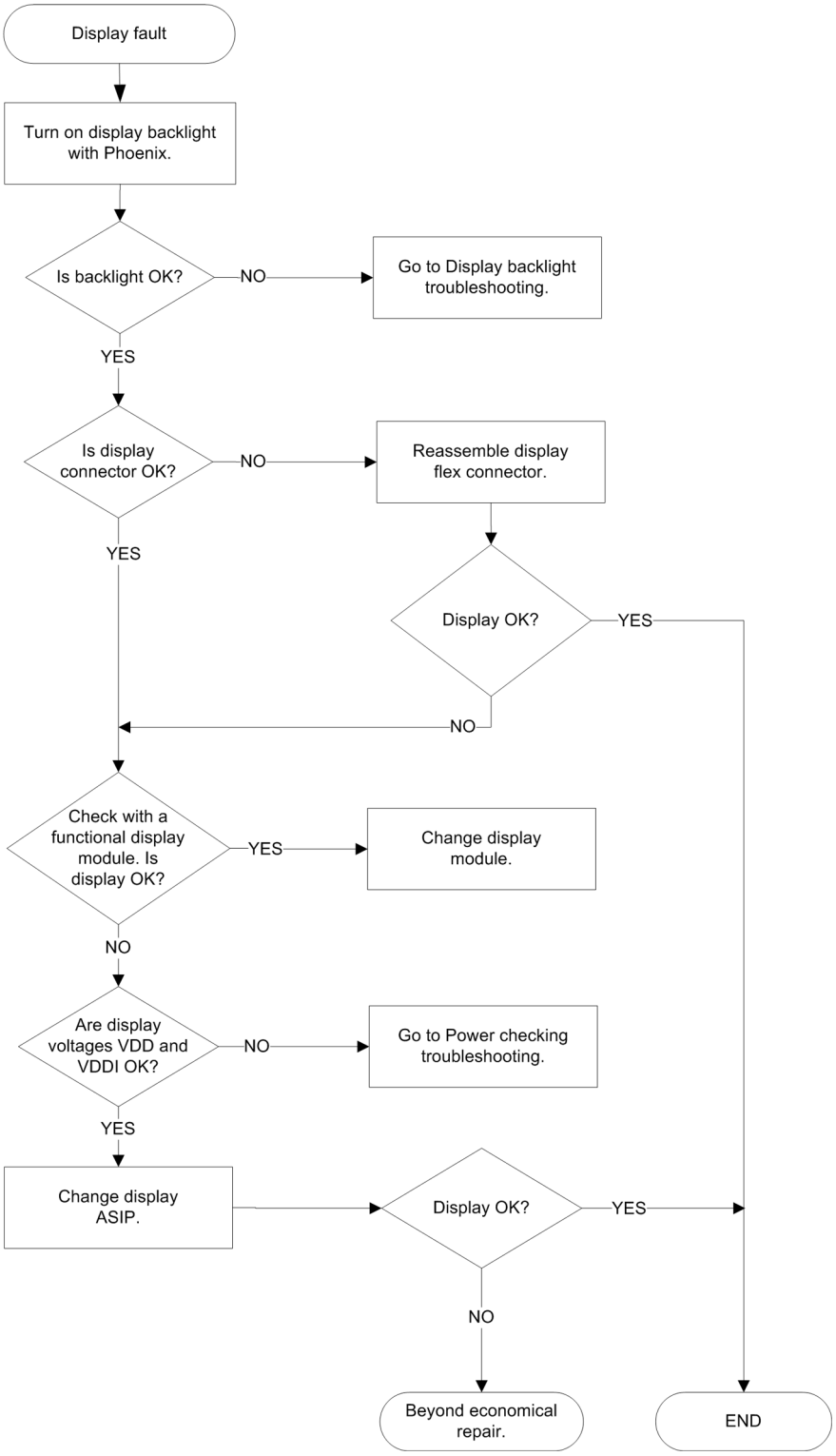

Display backlight troubleshooting

Troubleshooting flow

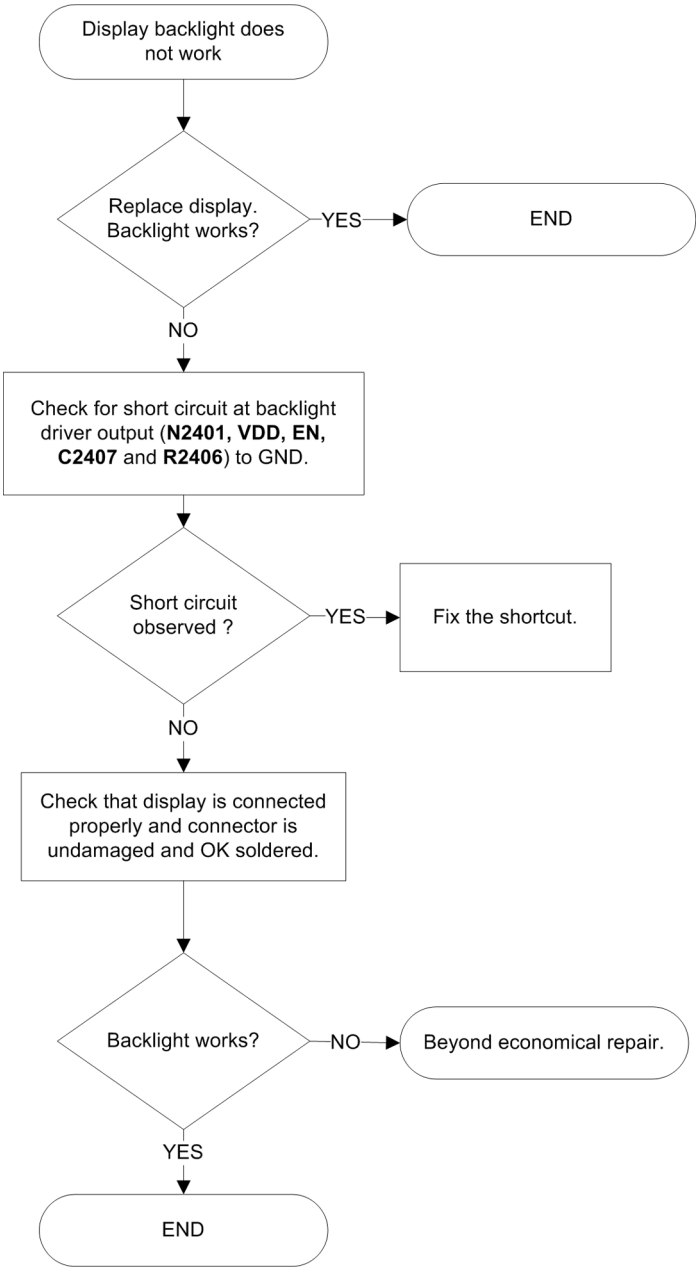

Ambient light sensor (ALS)

ALS troubleshooting

Troubleshooting flow

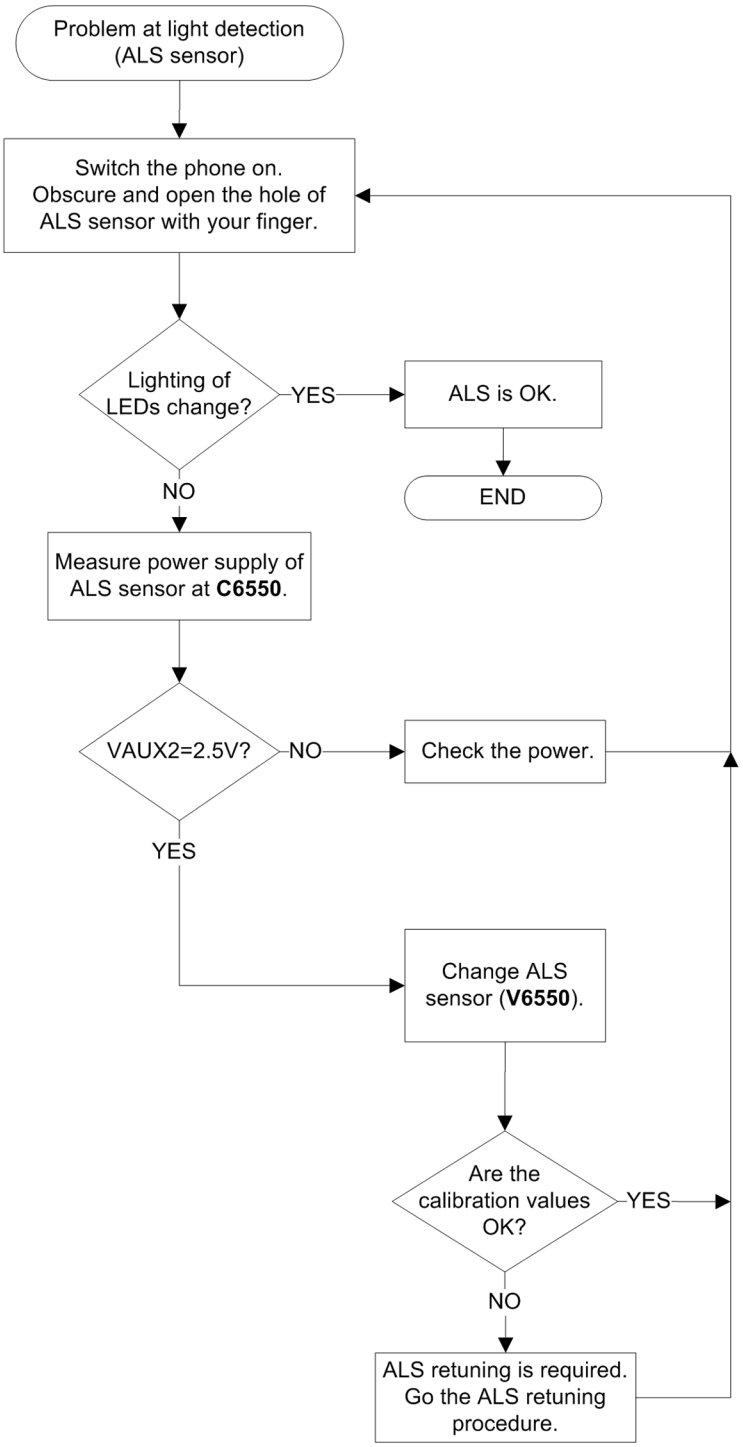

ALS functionality check

Steps

1. Connect phone to Phoenix and set the phone (e.g. on the table) so that the amount of ambient light seen by ALS is as stable as possible.
2. Start Phoenix
3. Choose **File -> Scan product**
4. Choose **Testing -> Display Test**
5. Open the **Lights** tab, check Ambient Light Sensor check box, click **Read**, cover the sensor and click **Read** again. When covered, Luminance reading should be less than after clicking **Read** without covering the sensor.
6. If component doesn't give any reading or reading doesn't change when sensor is/is not covered, replace the part.

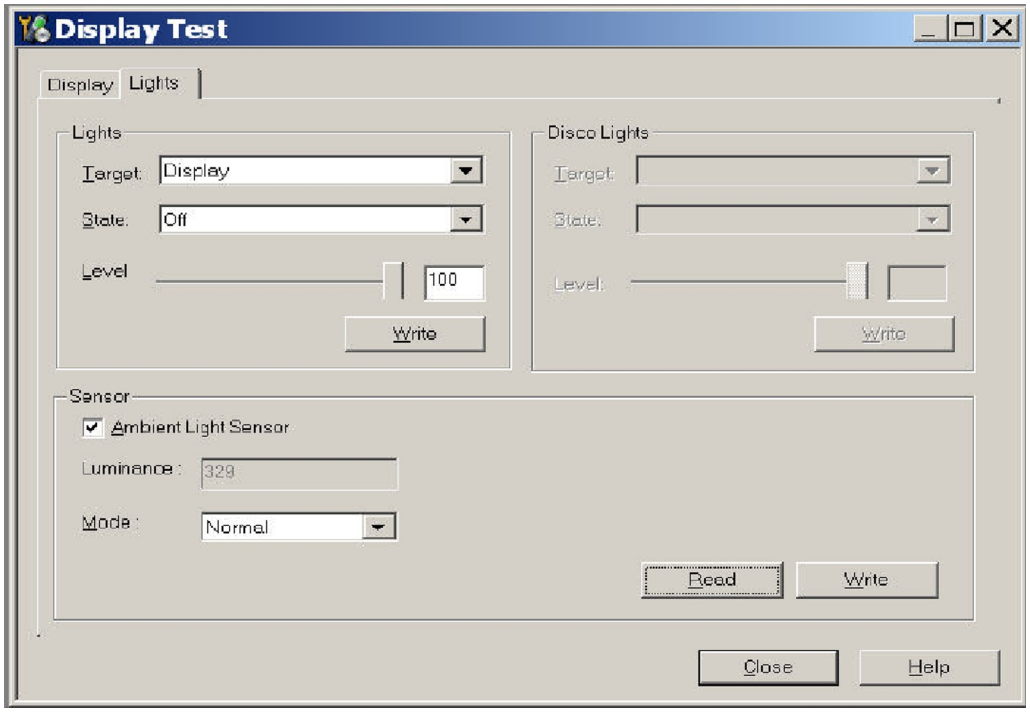

Note: After replacing the ALS. If calibration values of the new sensor are lost or for some other reason, ALS re-tuning is required (see instructions later in this document).

When doing the ALS calibration procedure, it is required to have a reference phone, which includes calibrated ALS. ALS re-tuning instructions show why the reference phone is needed.

ALS retuning

Steps

1. Connect reference phone to *Phoenix* and set the phone (e.g. on the table) so that the amount of ambient light seen by ALS is as stabile as possible.
2. Start *Phoenix*.
3. Choose **File→Scan Product**.

4. Choose **Tuning -> Ambient Light Sensor Calibration**. You should see the following window

5. Read AD-count values for Channel 0 by click Read button and write them down.
6. Repeat 1-5 for the phone to be calibrated and make sure the phone to be calibrated is located in the same place as reference phone was when luminance reading was taken.
7. Calculate co-efficient from reference phone and phone to be calibrated AD-count values by division: Co-efficient = AD-count(reference phone) / AD-count(phone to be calibrated), write down the calculated co-efficient values.
8. -> Iterate by changing Channel 0 (reference level) value (remove cross from 'Use default values only'). After writing some value to Channel 0 (reference value), calibrate button must be pressed. Stop iterating when Co-efficient is equal to Co-efficient calculated in bullet 7. Note that decimal numbers should be used in the iteration in order to achieve enough precision (e.g. 200.2455)
9. After having same Co-efficient value in "Co-efficient" textbox as the calculated value, make sure that ambient light values (read using **Testing → Display Test → "Luminance"** textbox) are almost the same in reference phone and calibrated phone. Remember that illuminance readings for reference and calibrated phones must be done in the same ambient light conditions. If illuminance values differs a lot (difference max. +- 10%), repeat whole ALS re-tuning procedure.
10. To end the calibration, click **Close**.

Camera module troubleshooting

Introduction to camera troubleshooting

Bad conditions often cause bad pictures. Therefore, the camera operation has to be checked in constant conditions or by using a second, known-to-be-good Nokia device as reference. Image quality is hard to measure quantitatively, and the difference between a good and a bad picture can be small. Some training or experience may be needed to detect what is actually wrong.

When checking for possible errors in camera functionality, knowing what error is suspected significantly helps the testing by narrowing down the amount of test cases. The following types of image quality problems are common:

- Dust (black spots)
- Lack of sharpness
- Bit errors

Camera troubleshooting

Taking and evaluating test pictures

When *taking* a test picture, remember the following:

- Avoid bright fluorescent light, 50/60Hz electrical network or high artificial illumination levels
- If the phone is hot, let it rest for a while before taking the picture
- Make sure the optical system is clean
- Use highest possible resolution
- Make sure the light is sufficient (bright office lightning)
- Do not take the picture towards a light source
- Hold the phone as still as possible when taking the picture
- If camera has auto focus: Pictures should be taken both at infinity ~>2m and at macro distance ~10-15 cm in order to verify auto focus functionality

When *evaluating* a test picture, remember the following:

- The center of the picture is sharper than the edges
- The image may be blurred, though it does not show in the viewfinder
- Analyse the picture from your PC monitor, full colour setting is recommended
- If possible, compare with a picture of the same motive taken with a similar Nokia device
- If camera has auto focus: Remember that the white focussing frame which appears when the camera button is pressed halfway down, must turn green for auto focus lock. If the frame turns red, the camera is not focussed!

Camera troubleshooting

Troubleshooting flow

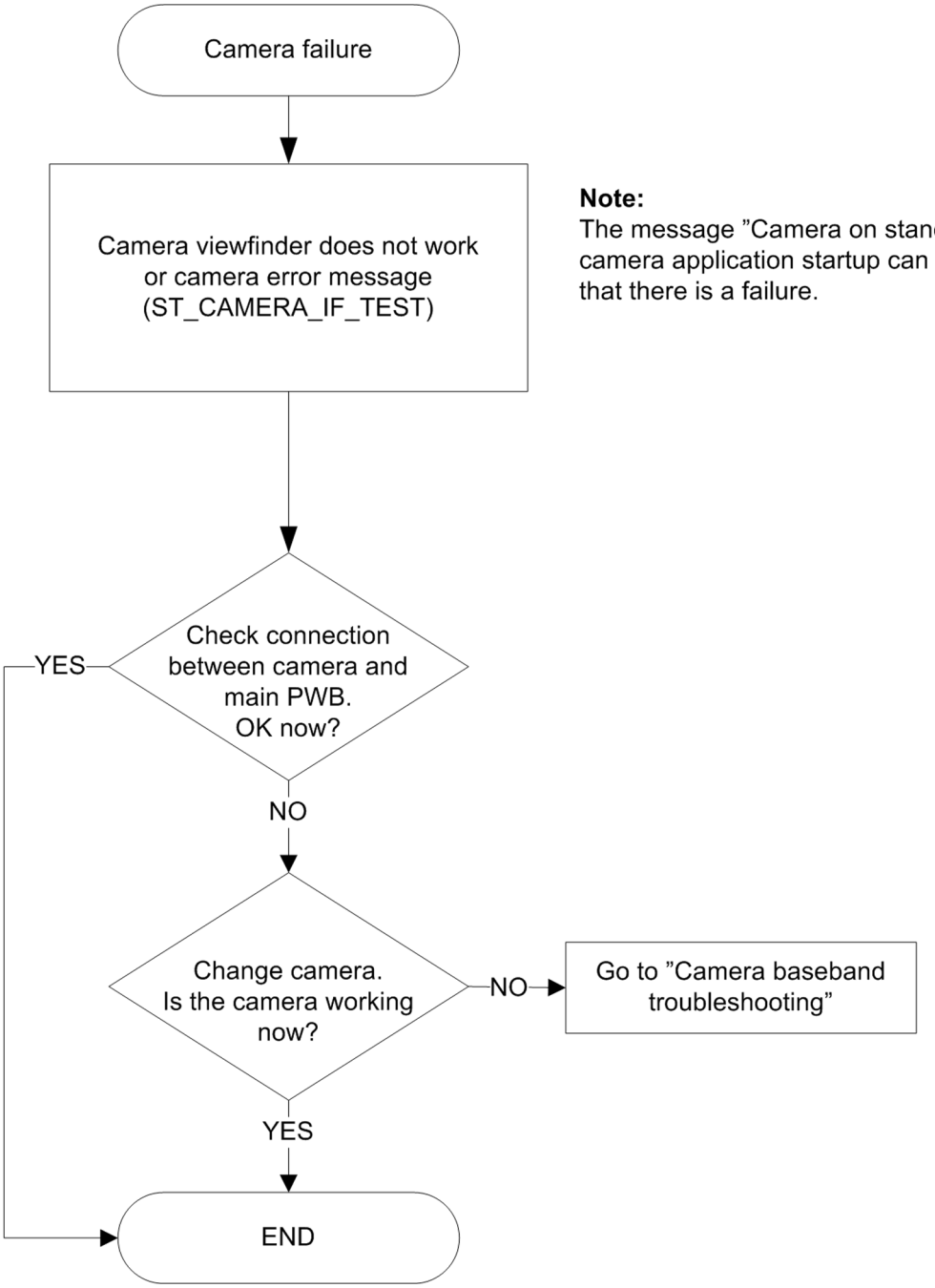

Note:
The message ”Camera on standby” at camera application startup can indicate that there is a failure.

Camera baseband troubleshooting

Troubleshooting flow

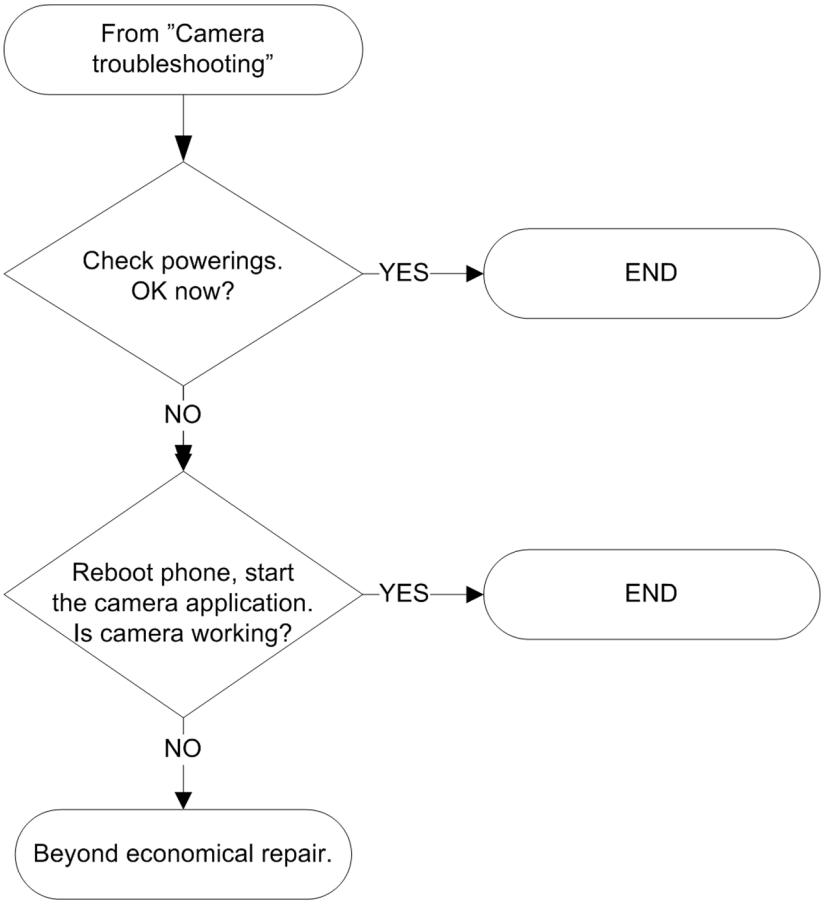

Camera no recognizable viewfinder image troubleshooting

Troubleshooting flow

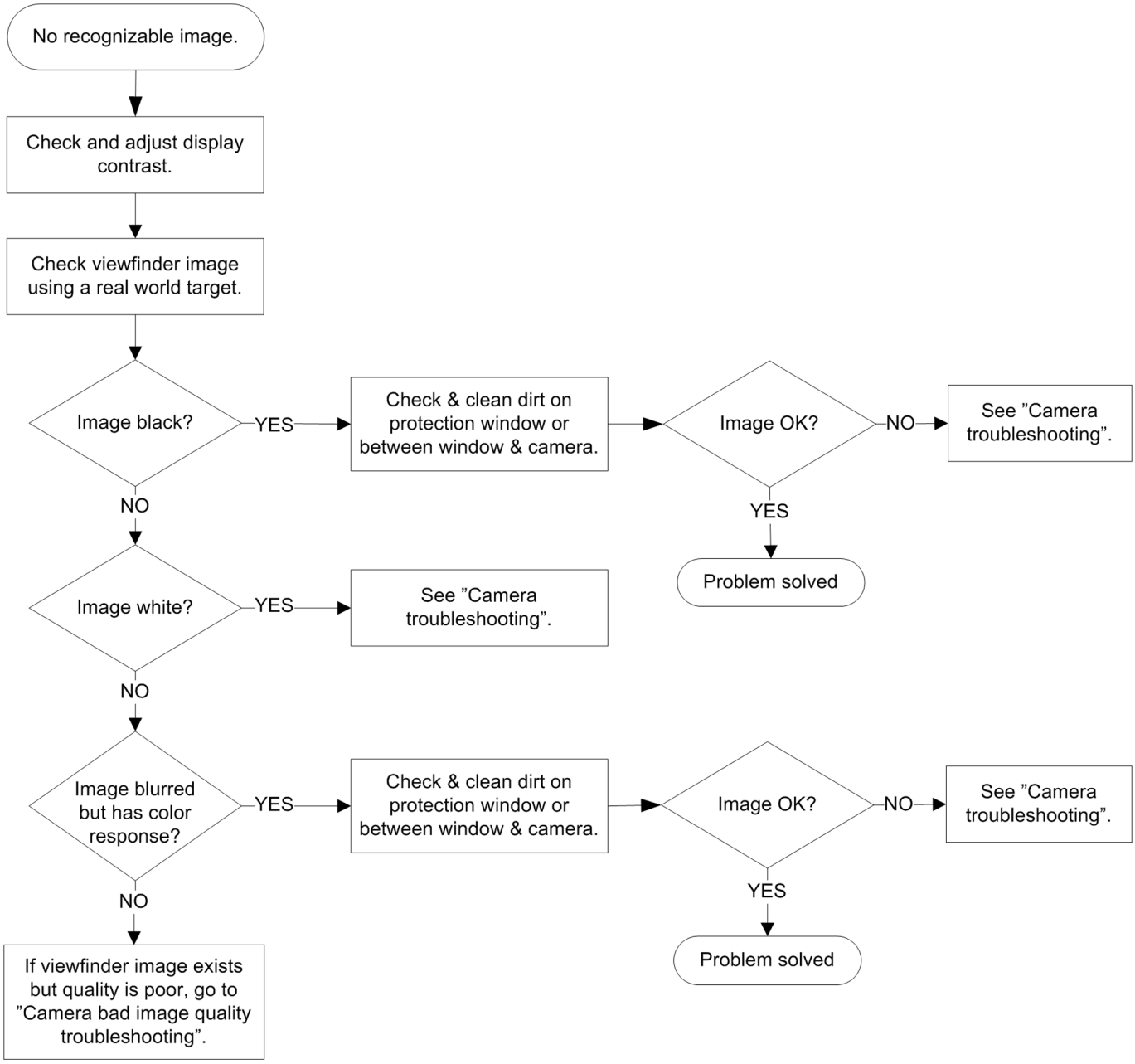

Camera bad image quality troubleshooting

Troubleshooting flow

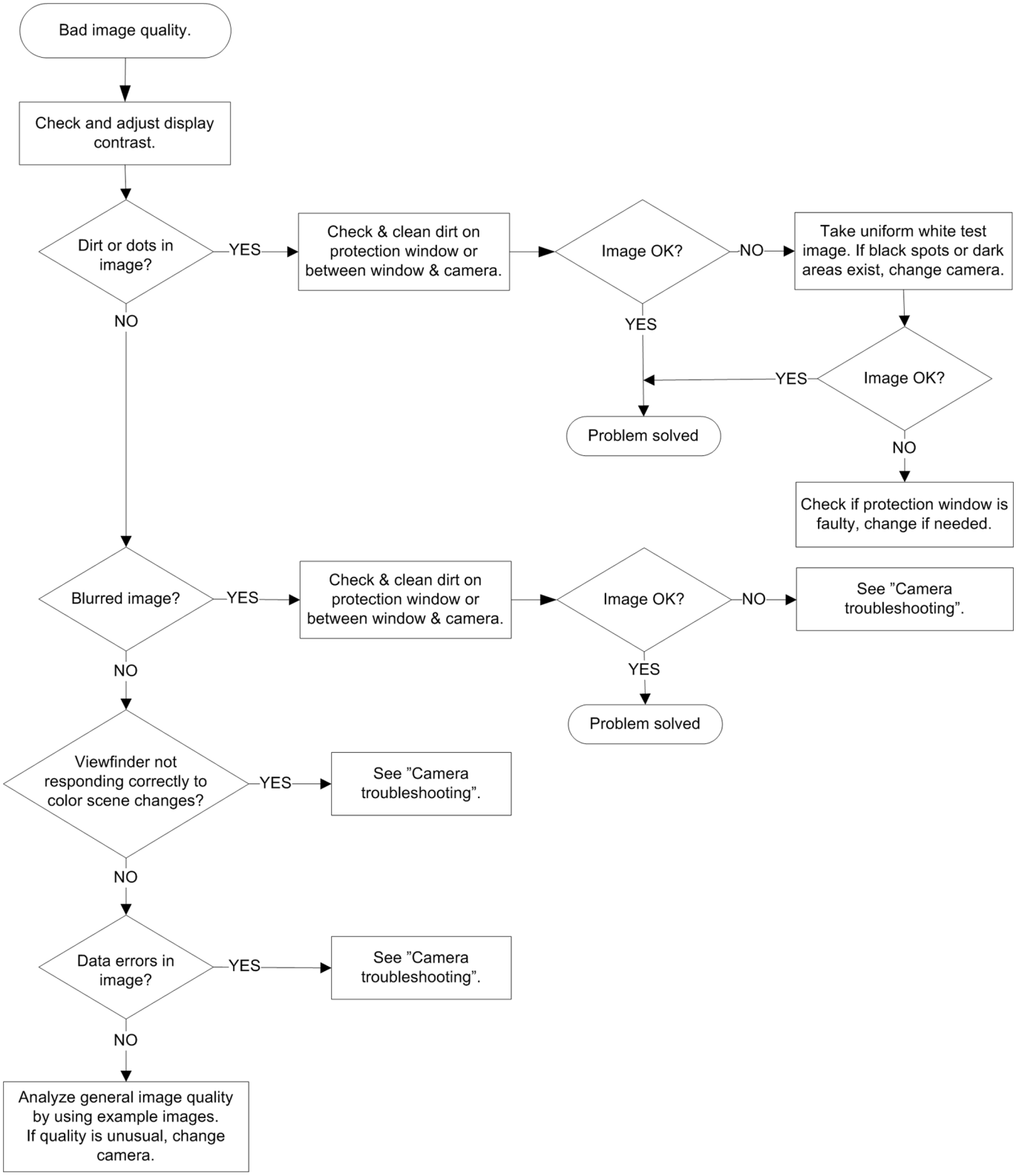

Camera flash troubleshooting

Context

Note: Before checking flash functionality, make sure that the camera is working ok.

Troubleshooting flow

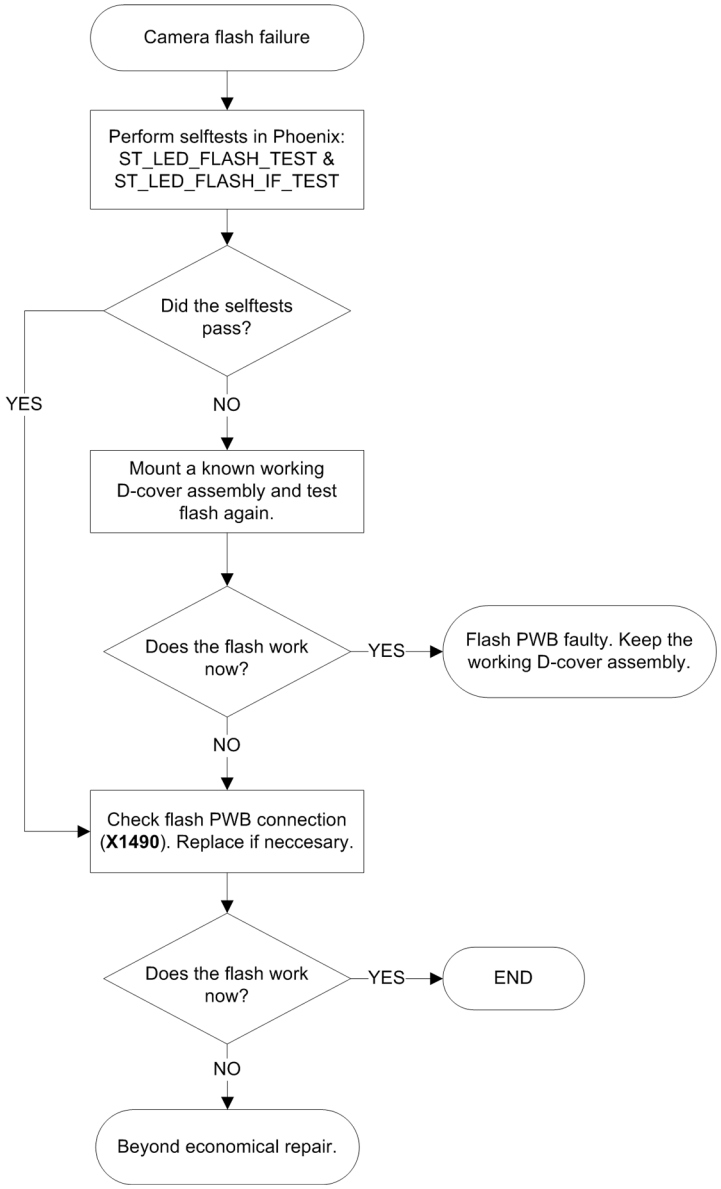

Audio troubleshooting

Audio troubleshooting test instructions

Differential external earpiece and internal earpiece outputs can be measured either with a single-ended or a differential probe.

When measuring with a single-ended probe each output is measured against the ground.

Internal handsfree output is measured using a current probe, if a special low-pass filter designed for measuring a digital amplifier is not available. Note also that when using a current probe, the input signal frequency must be set to 2kHz.

The input signal for each loop test can be either single-ended or differential.

Required equipment

The following equipment is needed for the tests:

- Oscilloscope
- Function generator (sine waveform)
- 'Active speaker' or 'speaker and power amplifier'
- Sound level meter
- Current probe (Internal handsfree DPMA output measurement)
- Phoenix service software
- Battery voltage 3.7V

Test procedure

Audio can be tested using the Phoenix audio routings option. Three different audio loop paths can be activated:

- External microphone to Internal earpiece
- External microphone to right Internal handsfree speaker
- External microphone to left Internal handsfree speaker

Each audio loop sets routing from the specified input to the specified output enabling a quick in-out test. Loop path gains are fixed and they cannot be changed using Phoenix. Correct pins and signals for each test are presented in a table in the following section.

Phoenix audio loop tests and test results

The results presented in this table apply when no accessory is connected and battery voltage is set to 3.7V.

Earpiece, internal microphone and speaker are in place during measurement. Applying a headset accessory during measurement causes a significant drop in measured quantities.

The gain values presented in the table apply for a differential output vs. single-ended/differential input.

Loop test	Input terminal	Output terminal	Path gain [dB]	Input voltage [mVpp]	Output voltage [mVpp]	Output DC level [V]	Output current [mA]
External Mic to External Earpiece	XMICP and GND	HSEAR R and GND	16.7	100	680	1.2	NA
		HSEAR L and GND					
	XMICN and GND	HSEAR R and GND					
		HSEAR L and GND					

Loop test	Input terminal	Output terminal	Path gain [dB]	Input voltage [mVpp]	Output voltage [mVpp]	Output DC level [V]	Output current [mA]
External Mic to Internal Earpiece	XMICP and GND	EarP and GND	10.9	100	353	1.2	NA
		EarN and GND					
	XMICN and GND	EarP and GND					
		EarN and GND					
External Mic to Internal handsfree	XMICP and GND	B2102 pads	28.1	100	2540	0	112mA (calc.)
	XMICN and GND	B2102 pads					

Measurement data

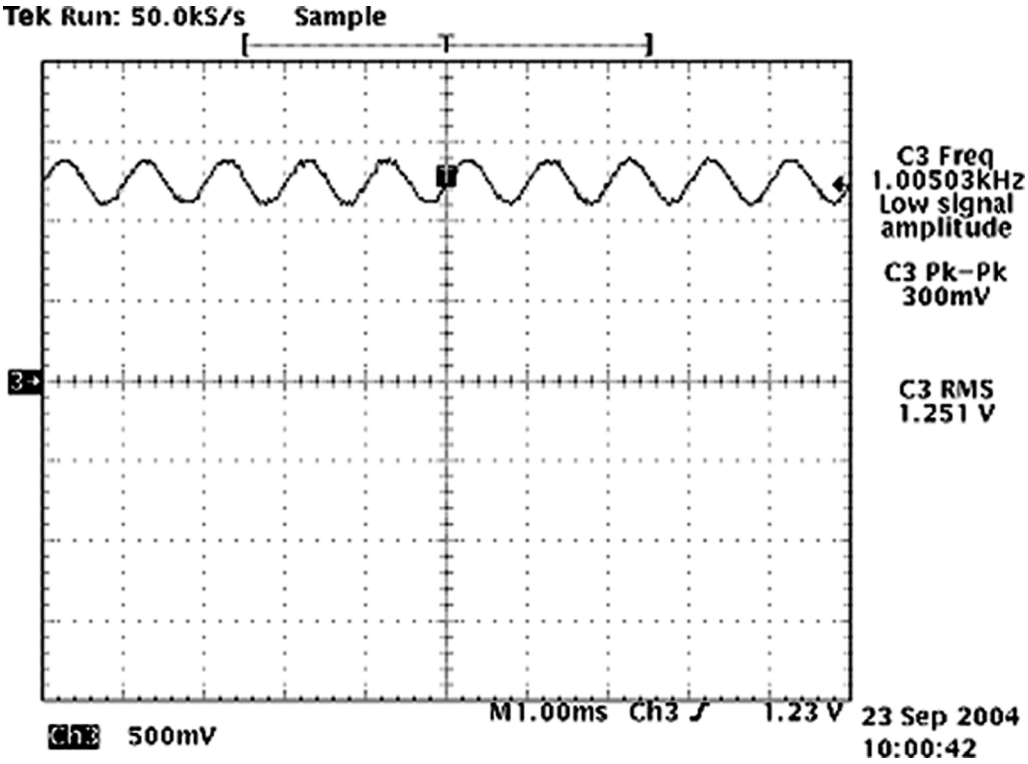

Figure 12 Single-ended output waveform of the Ext_in_HP_out measurement when earpiece is connected.

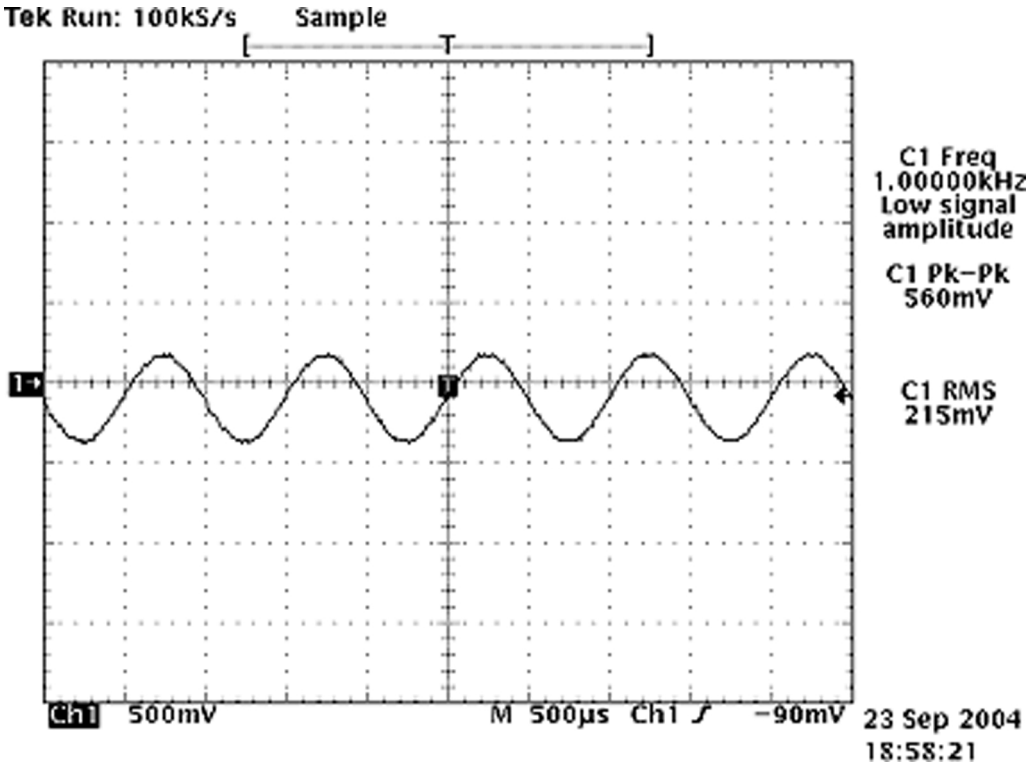

If a special low-pass filter designed for measuring digital amplifiers is unavailable, the measurement must be performed with a current probe and the input signal frequency must be 2kHz.

Figure 13 Differential output waveform of the Ext_in_IHF_out out loop measurement when speaker is connected.

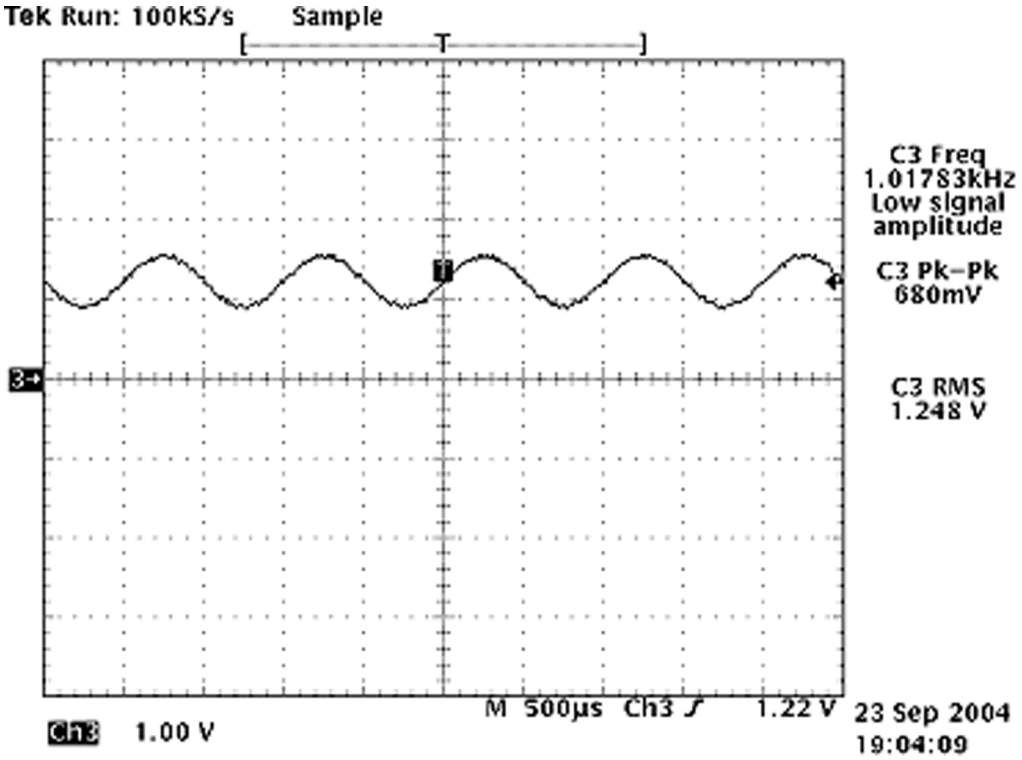

Figure 14 Single-ended output waveform of the HP_in_Ext_out loop when microphone is connected.

Internal earpiece troubleshooting

Troubleshooting flow

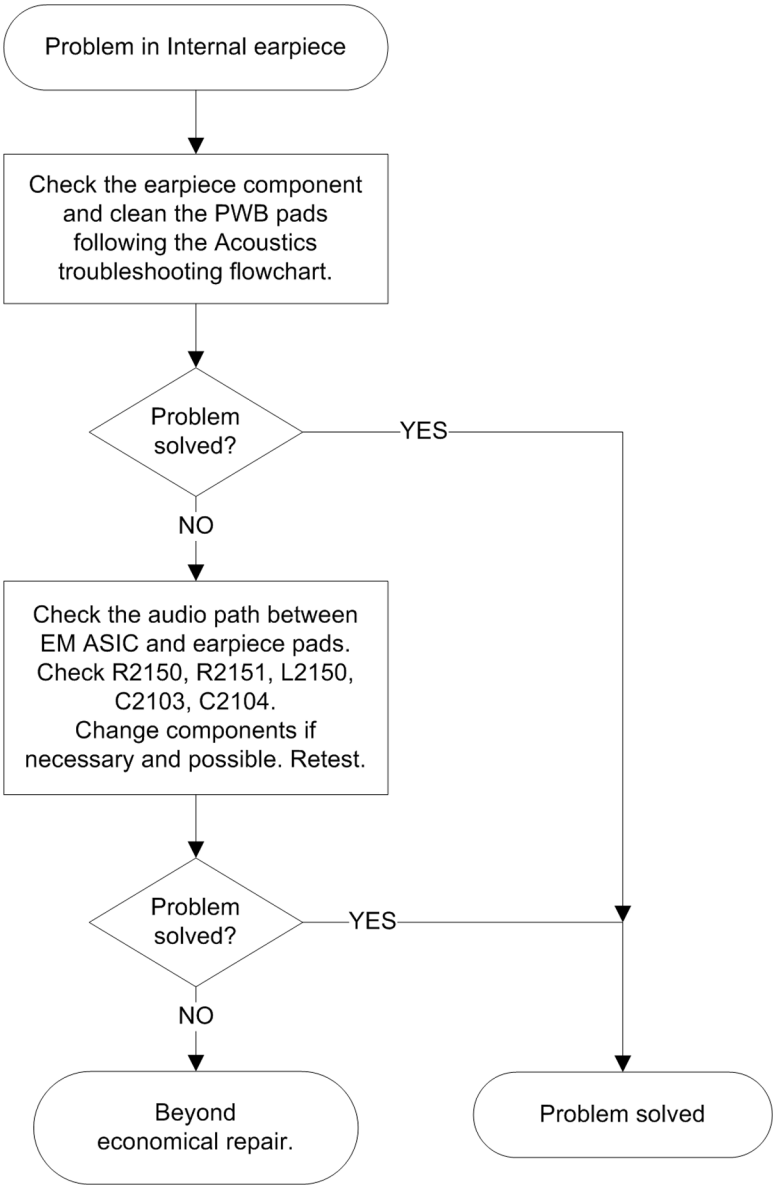

Internal handsfree (IHF) troubleshooting

Troubleshooting flow

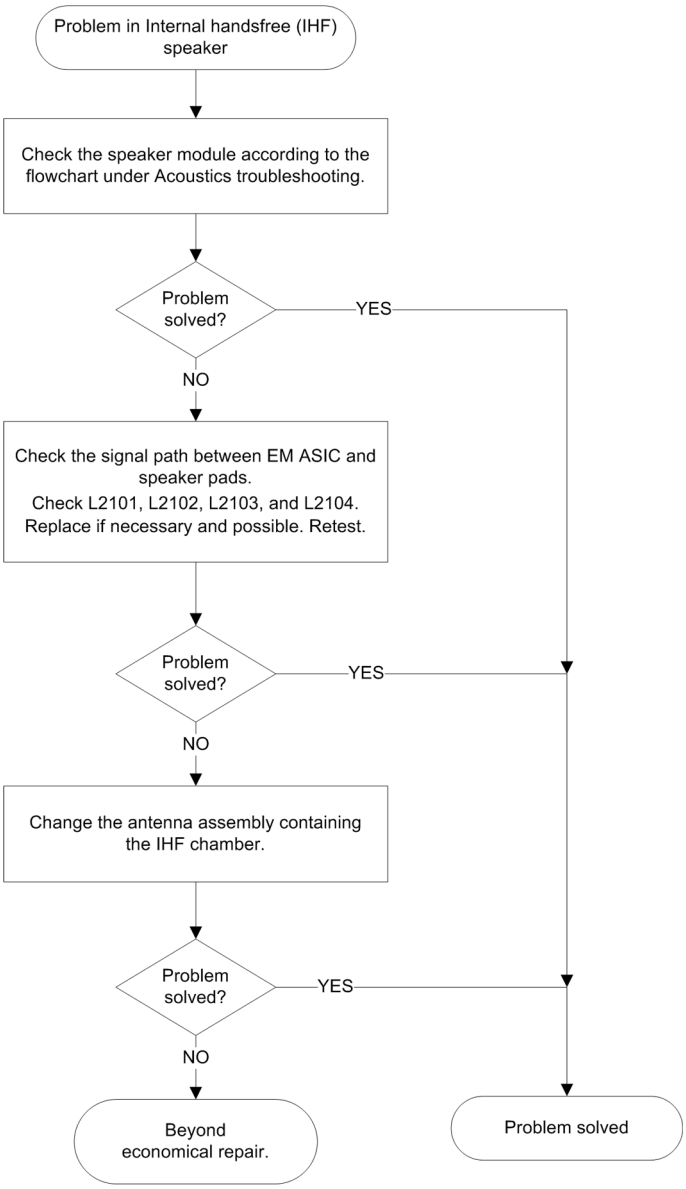

Internal microphone troubleshooting

Troubleshooting flow

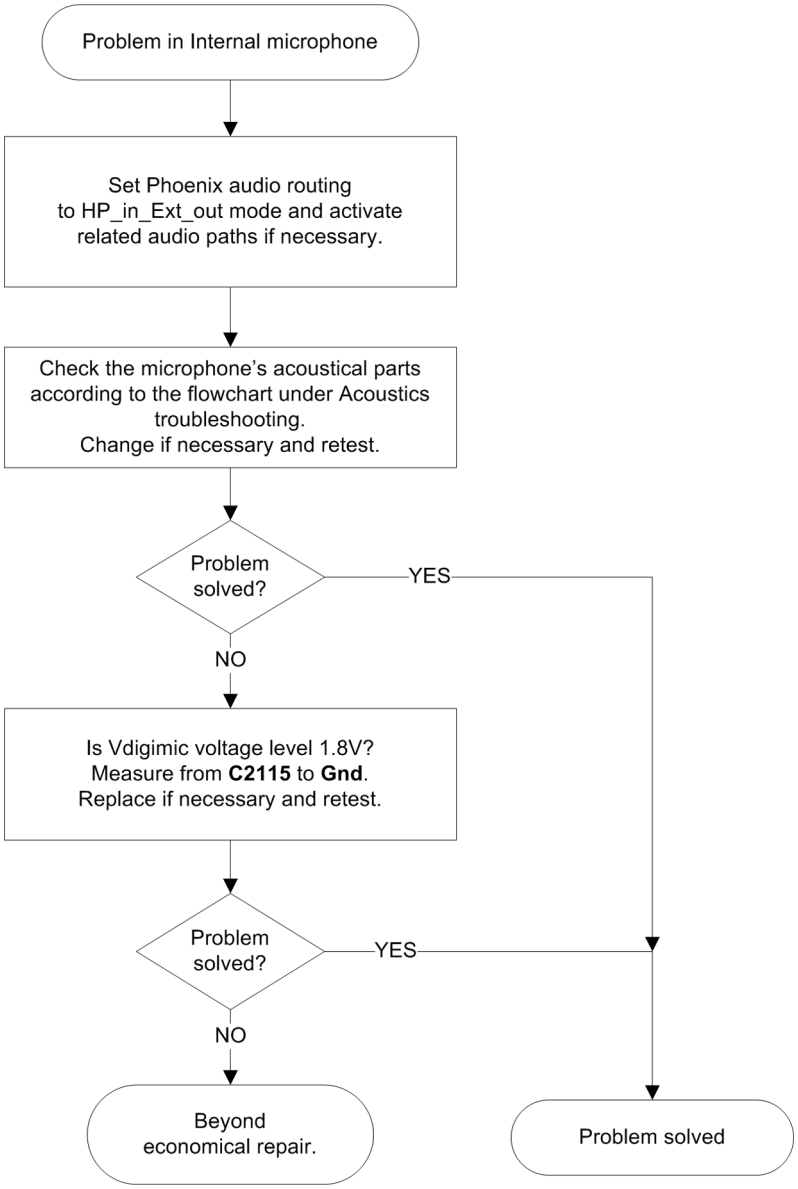

Acoustics troubleshooting

Introduction to acoustics troubleshooting

Acoustics design ensures that the sound is detected correctly with a microphone and properly radiated to the outside of the device by the speaker. The acoustics of the phone include three basic systems: earpiece, integrated handsfree (IHF) and microphone.

The sound reproduced from the earpiece eradiates through a single hole on the front cover (A-cover). The sound reproduced from the IHF speaker radiates from the sound hole located on the bottom of the phone. The inlet for the microphone is found on the edge of the QWERTY keymat next to Q and A.

For a correct functionality of the phone, all sound holes must be always open. When the phone is used, care must be taken not to close any of those holes with a hand or fingers. The phone should be dry and clean, and no objects must be located in such a way that they close any of the holes.

Earpiece troubleshooting

Troubleshooting flow

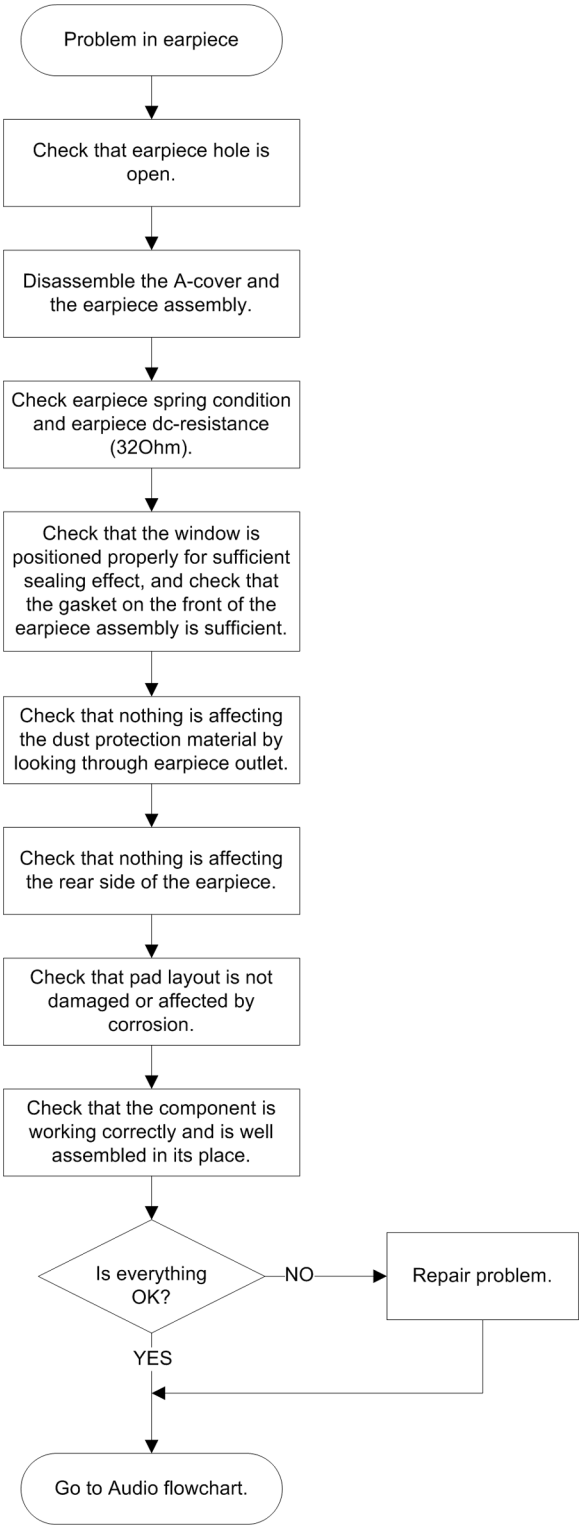

IHF troubleshooting

Troubleshooting flow

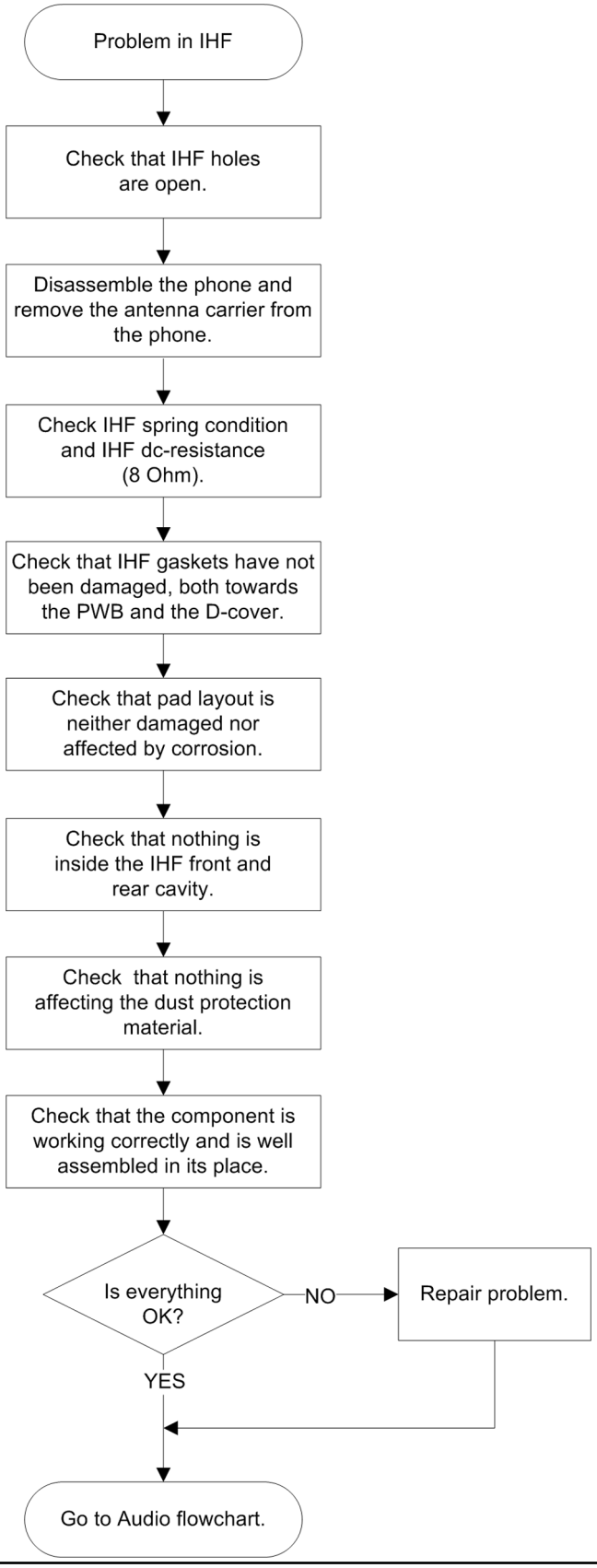

Microphone troubleshooting

Troubleshooting flow

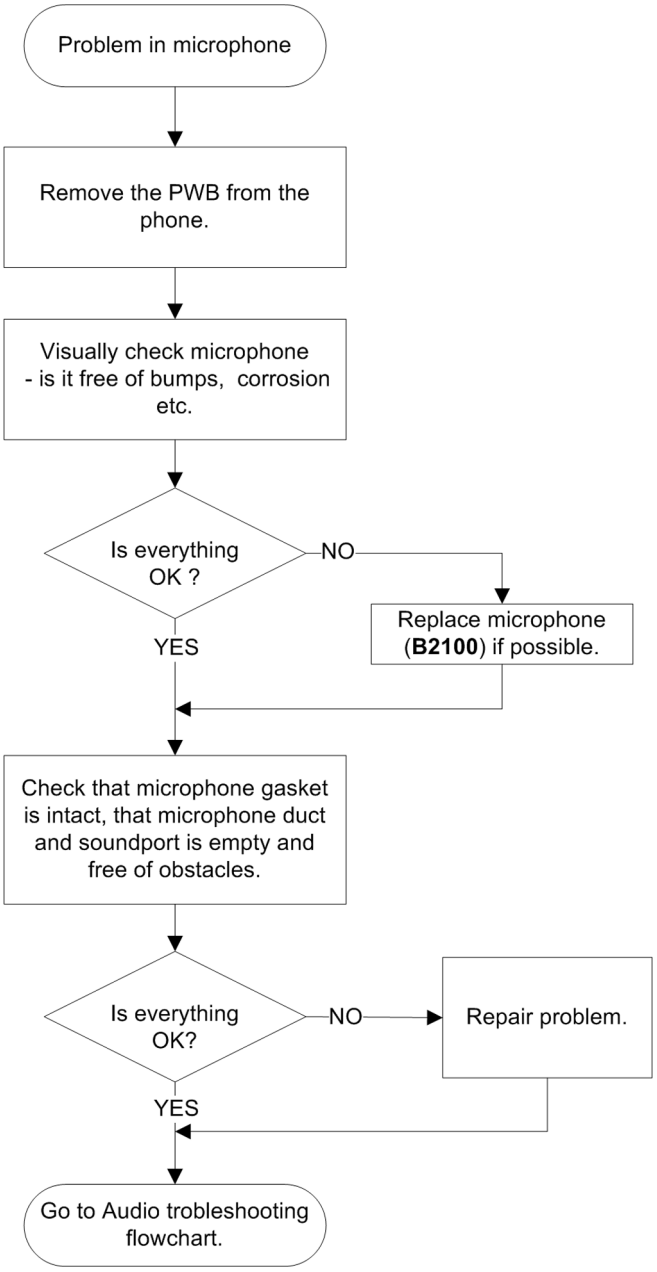

Vibra troubleshooting

Troubleshooting flow

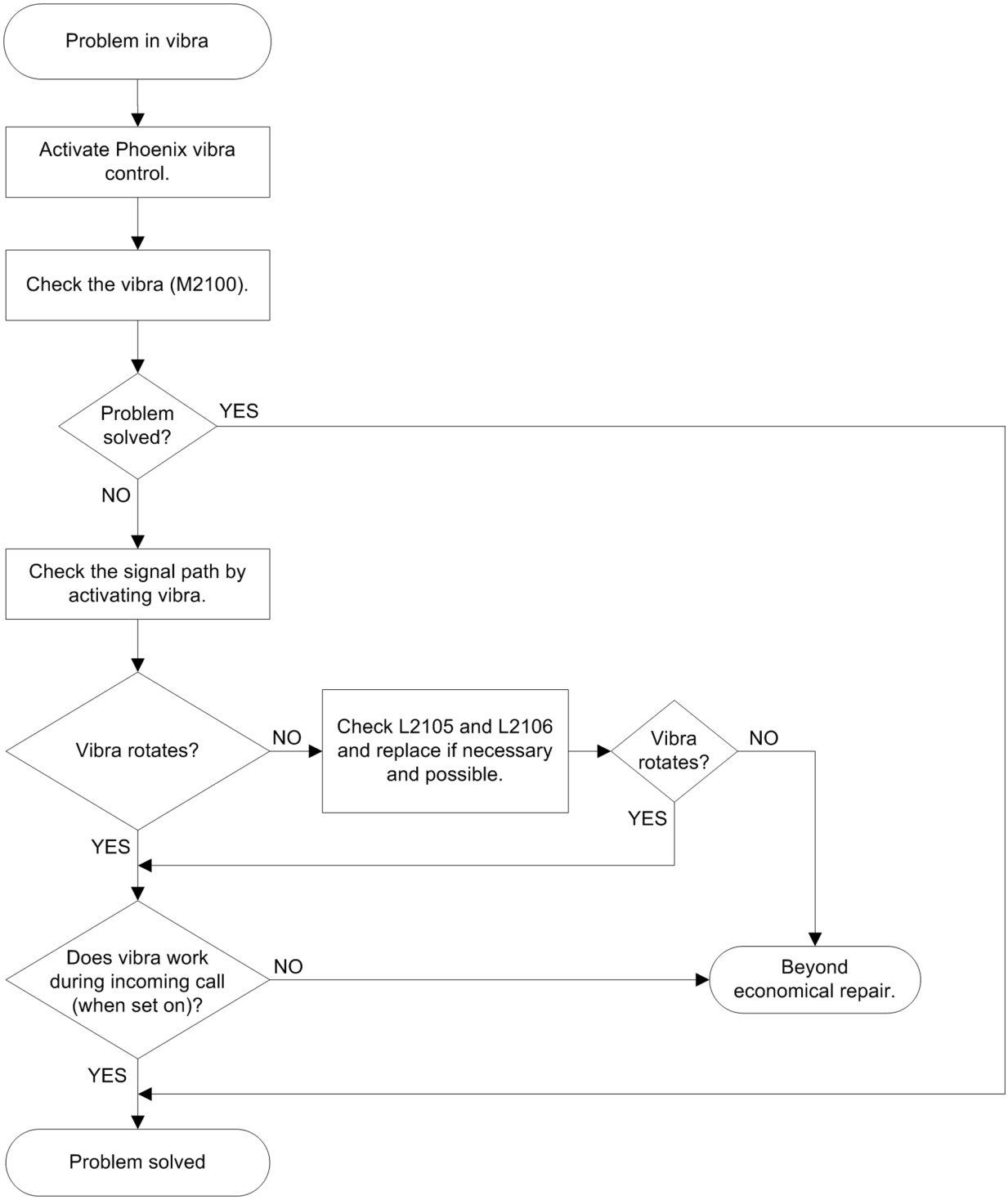

Bluetooth and FM radio troubleshooting

Bluetooth troubleshooting

Troubleshooting flow

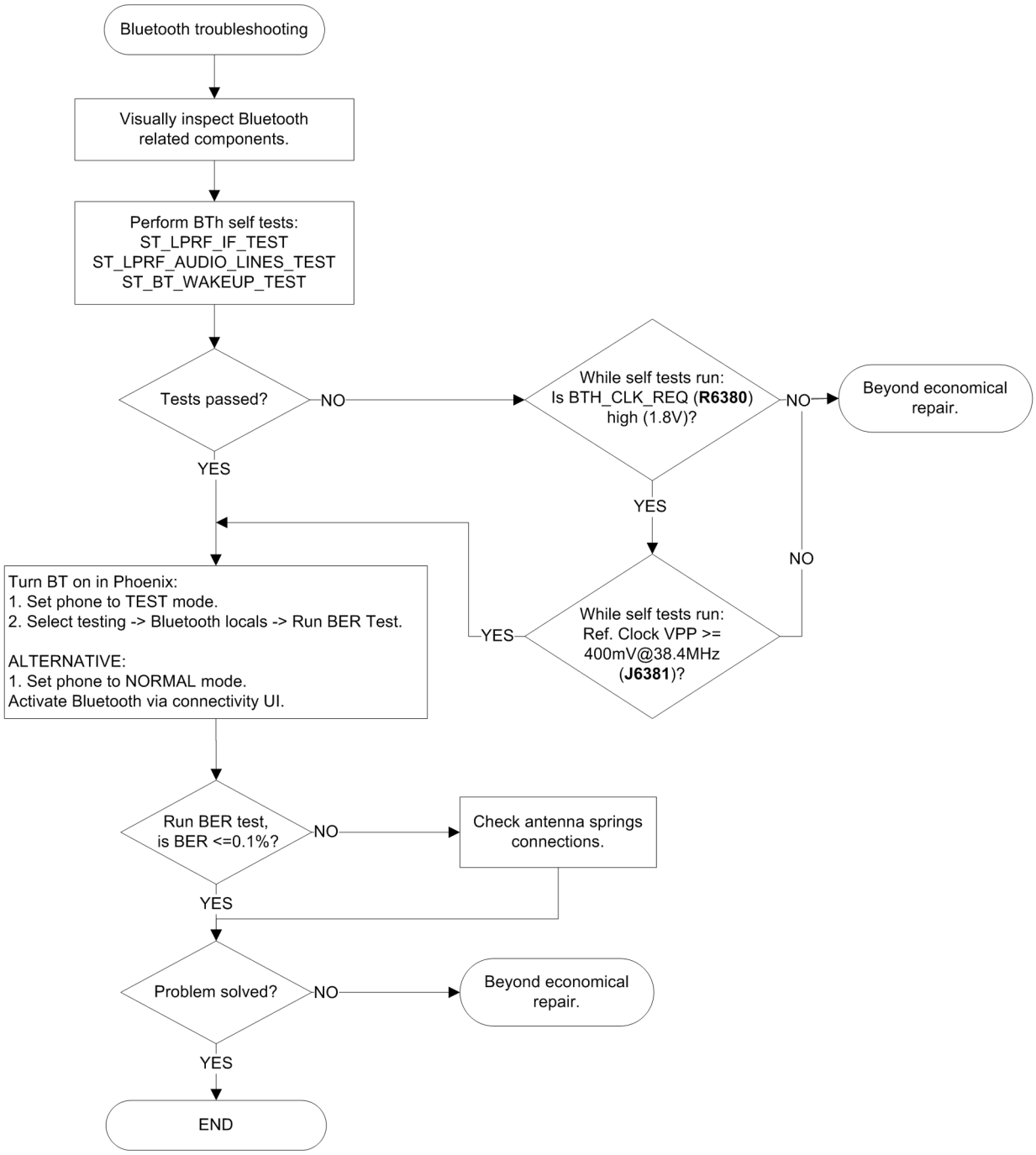

FM radio troubleshooting

Troubleshooting flow

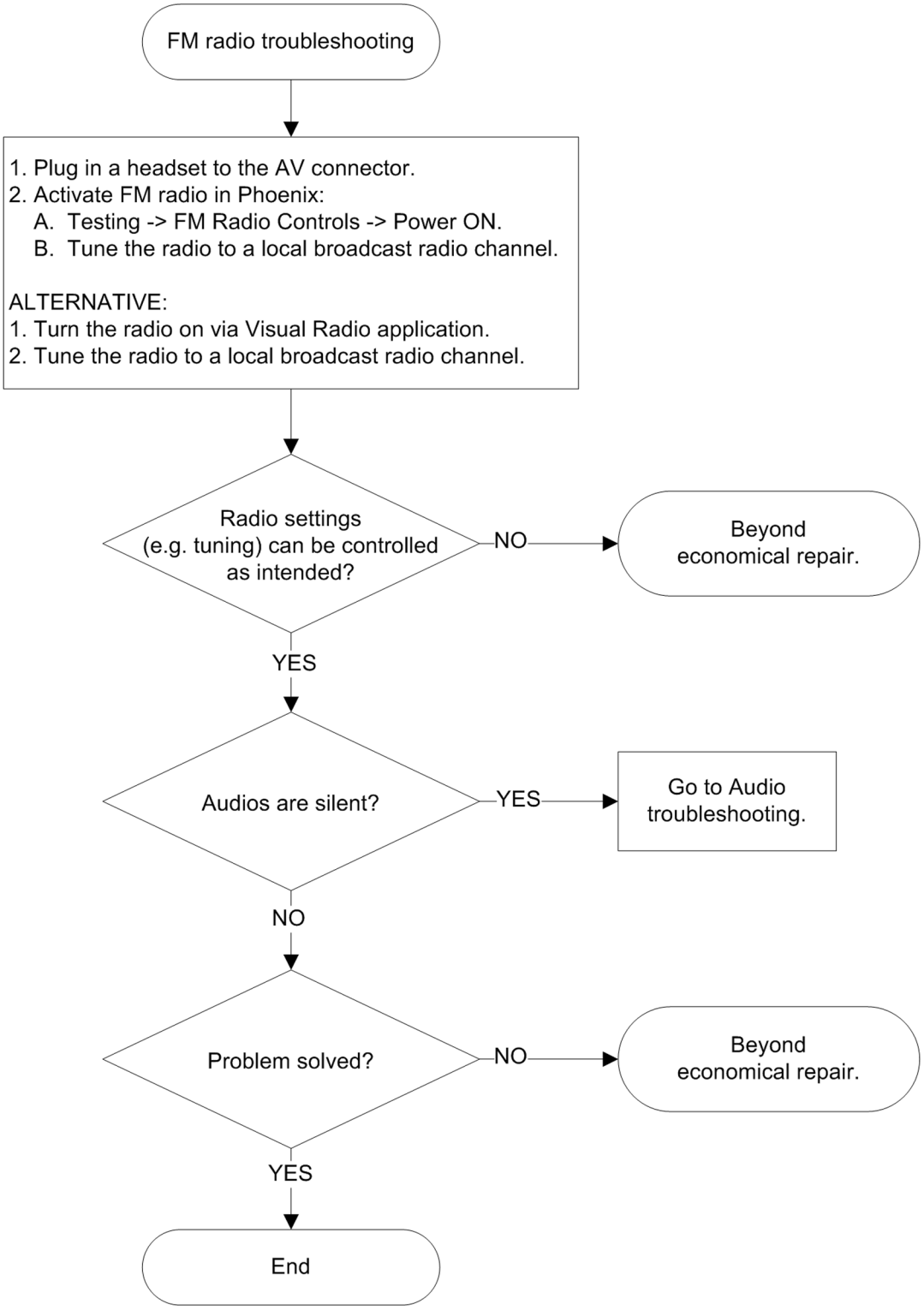

WLAN troubleshooting

WLAN functional description

The Size 4 WLAN module is designed for use with a single antenna shared between itself and a co-located BT device. The WLAN SW is downloaded from the host engine when the WLAN is turned on over the dedicated SPI interface. The BT and WLAN engines use common reference clock coming from a dedicated TCVCXO(G8380).

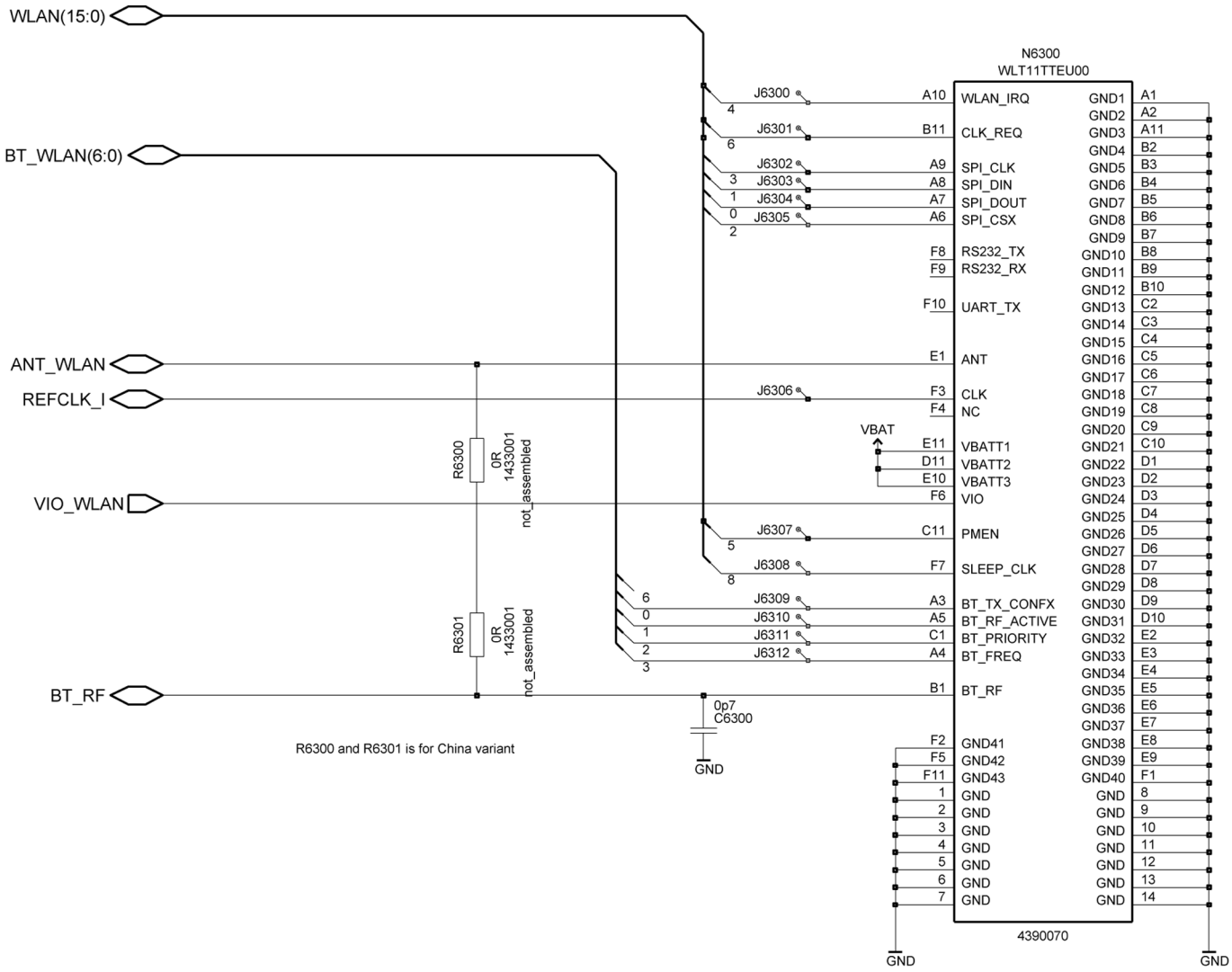

Figure 15 WLAN circuitry

WLAN settings for Phoenix

Use the following to test WLAN using Phoenix:

1 Set phone into Local Mode .

2 From the **File** menu, select **Scan Product** and check that the correct product version is displayed

3 From the **Testing** menu, select **Self Test**. This opens up a **Self Tests**dialog, as shown below.

Select the **ST_WLAN_TEST** check box as shown and then press the **Start** button. The test turns the WLAN on , sets up the SPI interface and then downloads the WLAN firmware into the WLAN module. During the download the WLAN acknowledges the data blocks and so the self test is a good way to confirm that the WLAN module is communicating with the Host. The result column changes to **Passed** after a few seconds if it is operating properly.

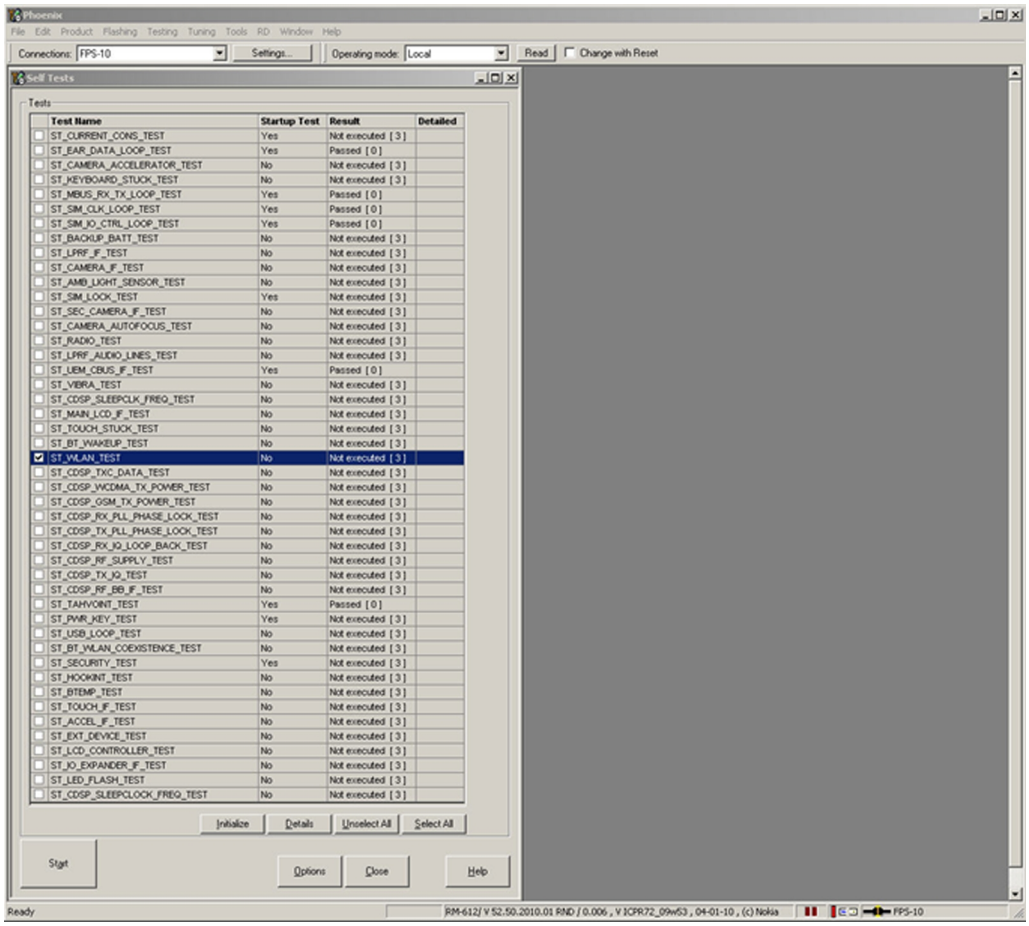

In addition, a test of the WLAN to BTH interface can be done by selecting the **ST_BT_WLAN_COEXISTENCE_TEST** check box and pressing the **Start** button.

This test verifies that the WLAN to BTH co-existence interface signals are properly connected and there are no open circuist or shorts on the four interface signals.

The co-existence interface comprises BTH Txconfig, BTH RF Active, BTH Priority, and BTH Frequency.

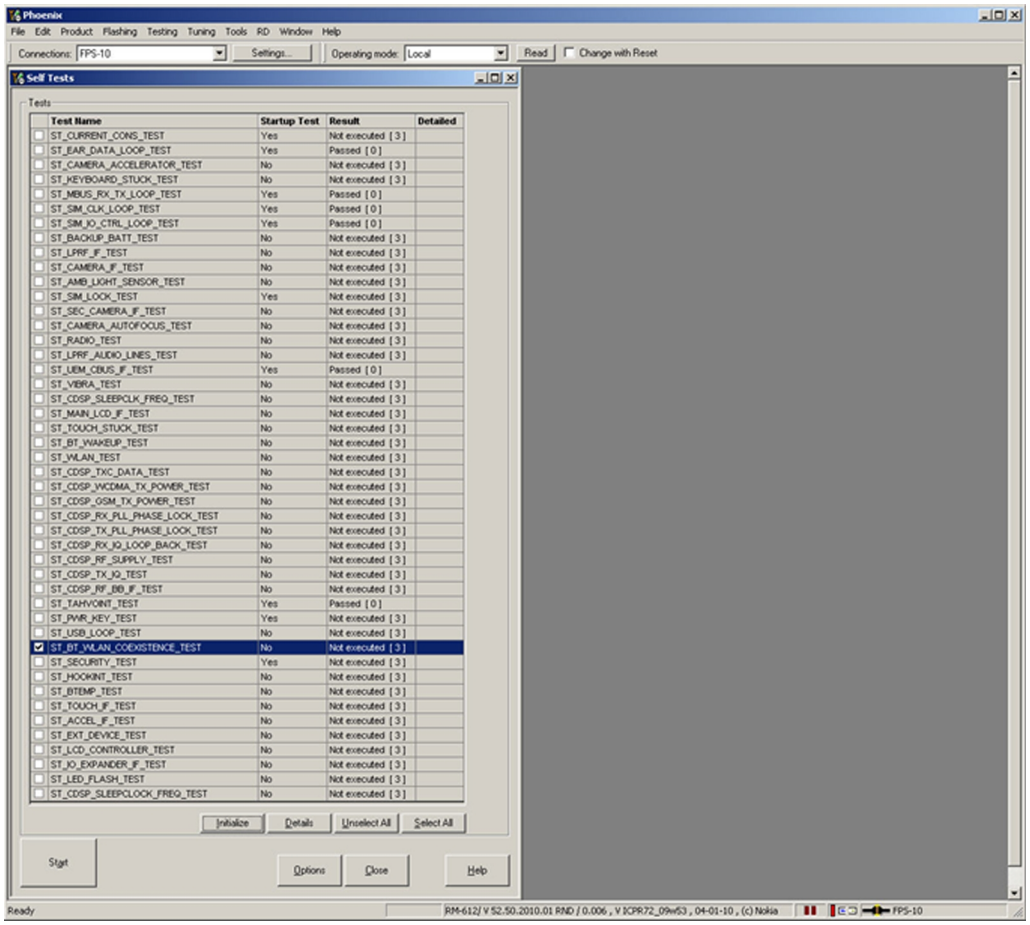

In summary these two Self Tests provide a simple means of ensuring that the Host engine is able to communicate with the WLAN module and check the interface to BTH. A more detailed WLAN performance test is covered in the WLAN functional tests (page 3–53) section.

WLAN functional tests

On/Off test

Prerequisites

A flash adapter connected to a PC with Phoenix service software is required.

From the **Testing** toolbar, select **WLAN Configuration** option. This opens the **WLAN Configuration** dialog as shown below. WLAN can be turned ON and OFF by selecting **On** or **Off** from the **Power state** drop-down list (as indicated in the picture below):

1 With **Power State** set to **Off**, measure the dc power supply current consumption of the flash adaptor.

2 Next return the **Power State** to **On** and re-measure the dc power supply current of the flash adaptor.

The difference between the currents in (1) and (2) should be between 190 to 220 mA. When WLAN is ON, the firmware has been downloaded and the WLAN module is in the receive state. When WLAN in OFF, WLAN is powered down.

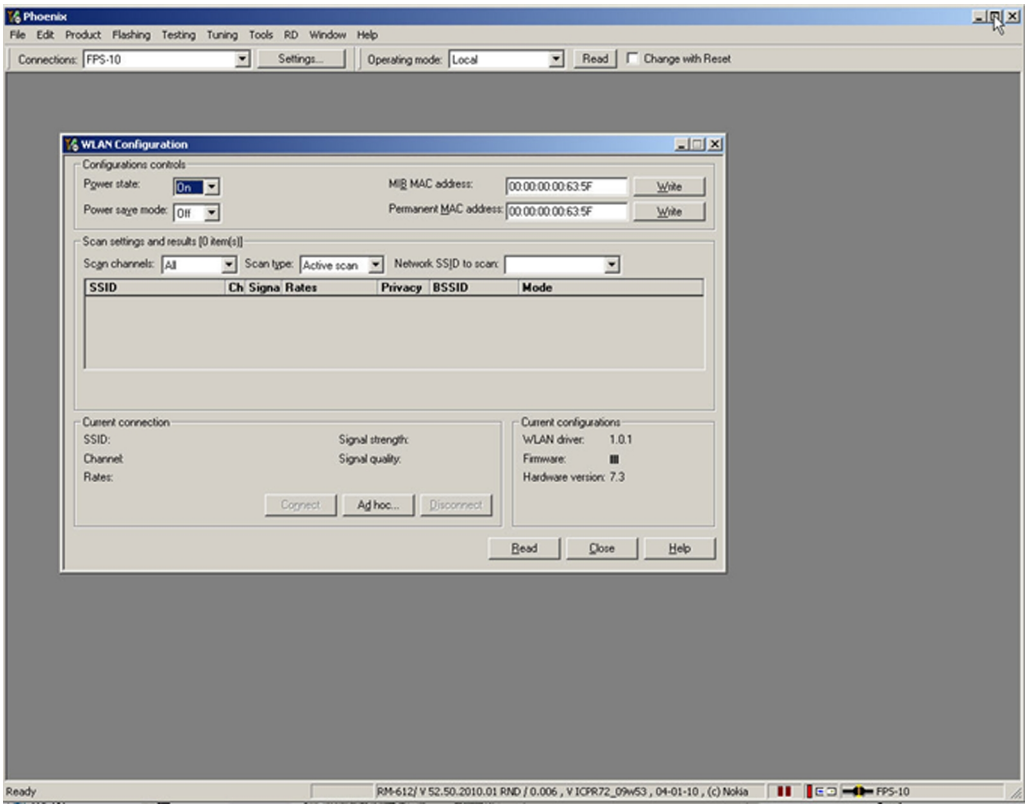

TX tests

Prerequisites

Connect a complete phone assembly with C-cover to a PC with Phoenix service software using a USB data cable.

From the **Testing** toolbar, select **WLAN Tx Tests** option as shown below. This test can be used to verify TX configuration and functionality. The default settings are sufficient for testing the TX operation, although other channels and data rates are equally suitable. To start the test, press the **Start** button:

1 Monitor the WLAN TX spectrum on a Spectrum analyser. (When making a radiated test ensure that other WLAN devices are not transmitting as these may be detected as well, confusing the result). A typical 11 Mbps TX spectrum is shown in the figure below.

2 To finish the test, Press the **Finish** button.

The difference between the two readings should be approximately 150 mA and measures the transmit current in 11 Mbps, 802.11b mode of operation.

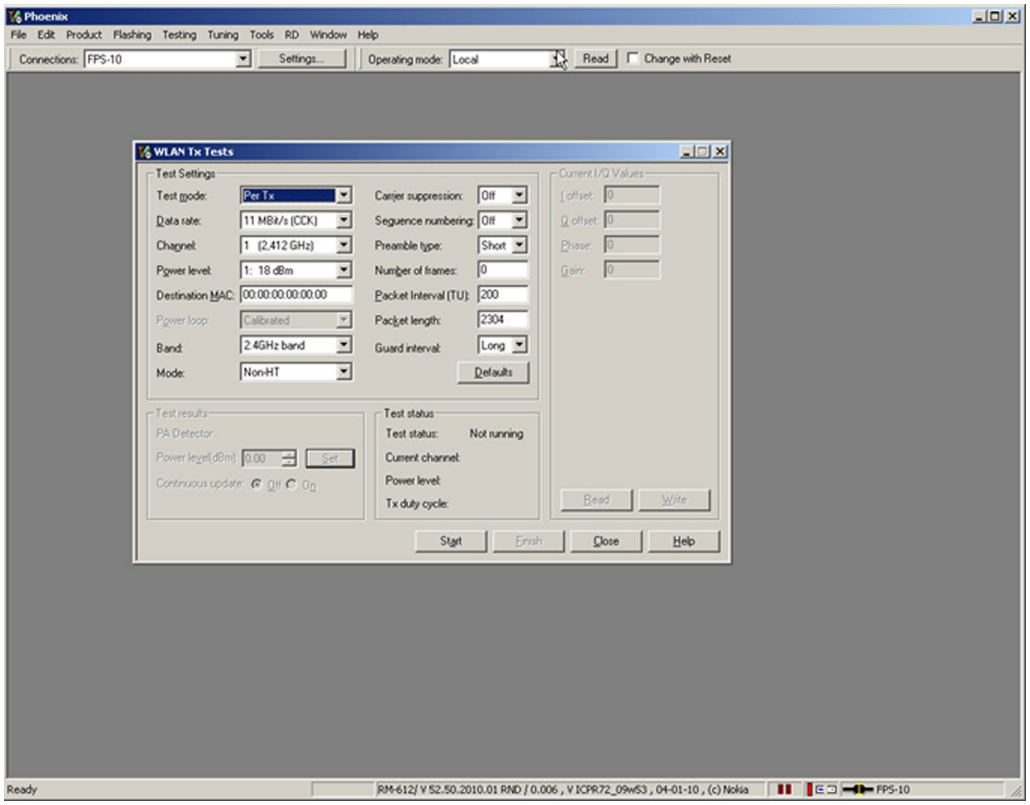

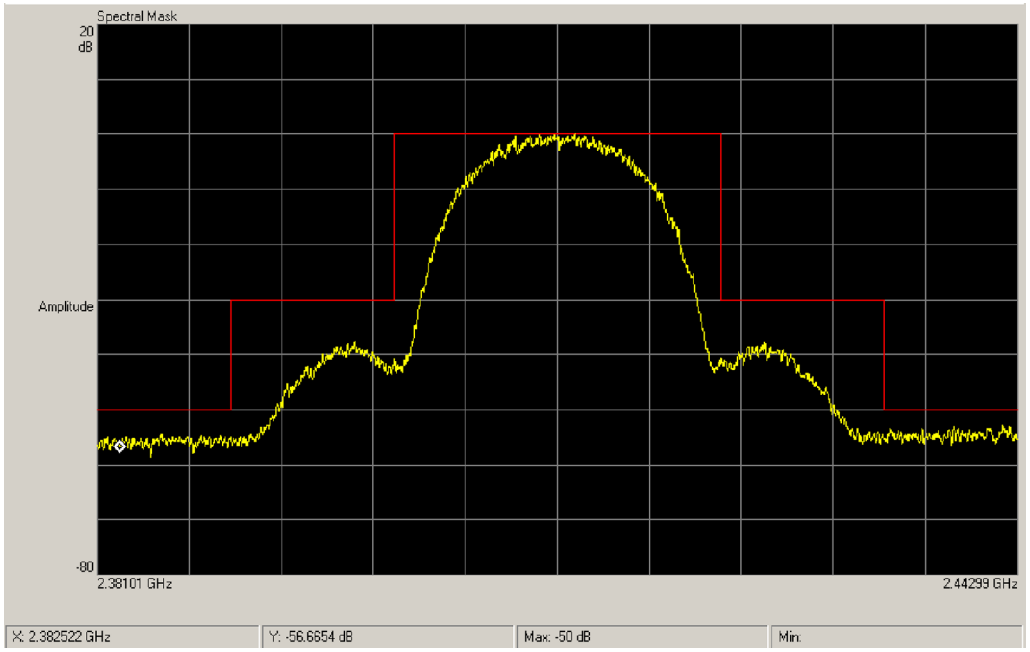

RX Tests

Prerequisites

Connect a complete phone assembly with C-cover to a PC with Phoenix service software using a USB data cable.

There are different options available for testing the Rx path. The simplest is to use the WLAN to report Rx packets when operating in an area where there is an active WLAN network. Simply starting an Rx test shows the number of packets detected by the WLAN module as it monitors the network. However, it requires a properly configured WLAN network.

From the **Testing** toolbar, select **WLAN Rx Tests** option as shown below. This test can be used to verify Rx configuration and functionality.

To start the test, press the **Start** button.

As the WLAN monitors an active WLAN network, the Rx test results window updates and shows the number of Frames received, as well as the Packer error rate.

Monitoring the detected frames is a simple method to verify that the WLAN antenna and receiver path are working properly.

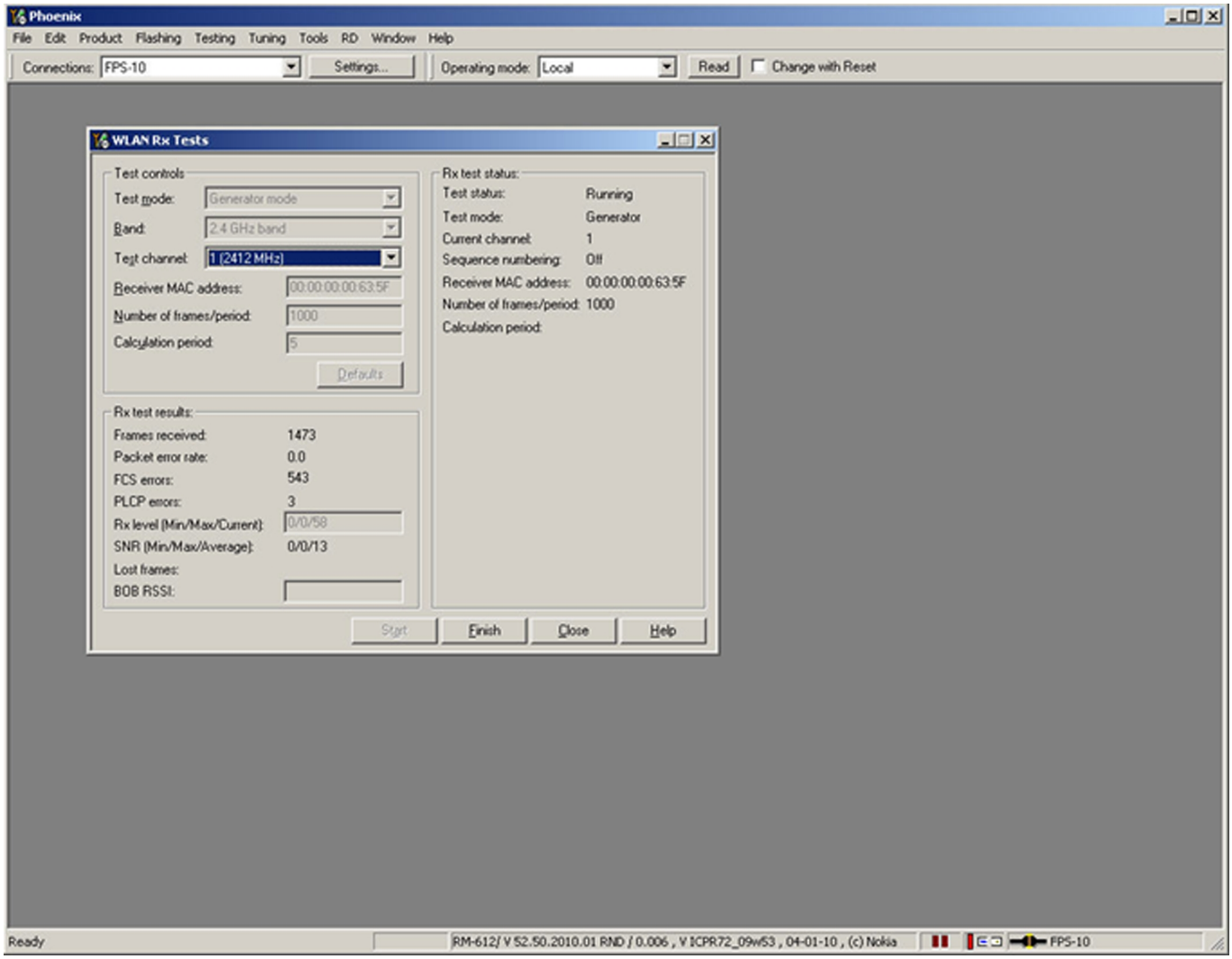

WLAN auto tuning

In case of WLAN ASIC change, RF power auto tuning is needed. Connect WLAN RF test connector to CMU200 input using proper RF cable. Start Phoenix WLAN autotune window. Check the settings and verify your PC communicates with CMU200 via GPIB.

Auto tuning procedure

1 Start tuning by pressing **Tune**.

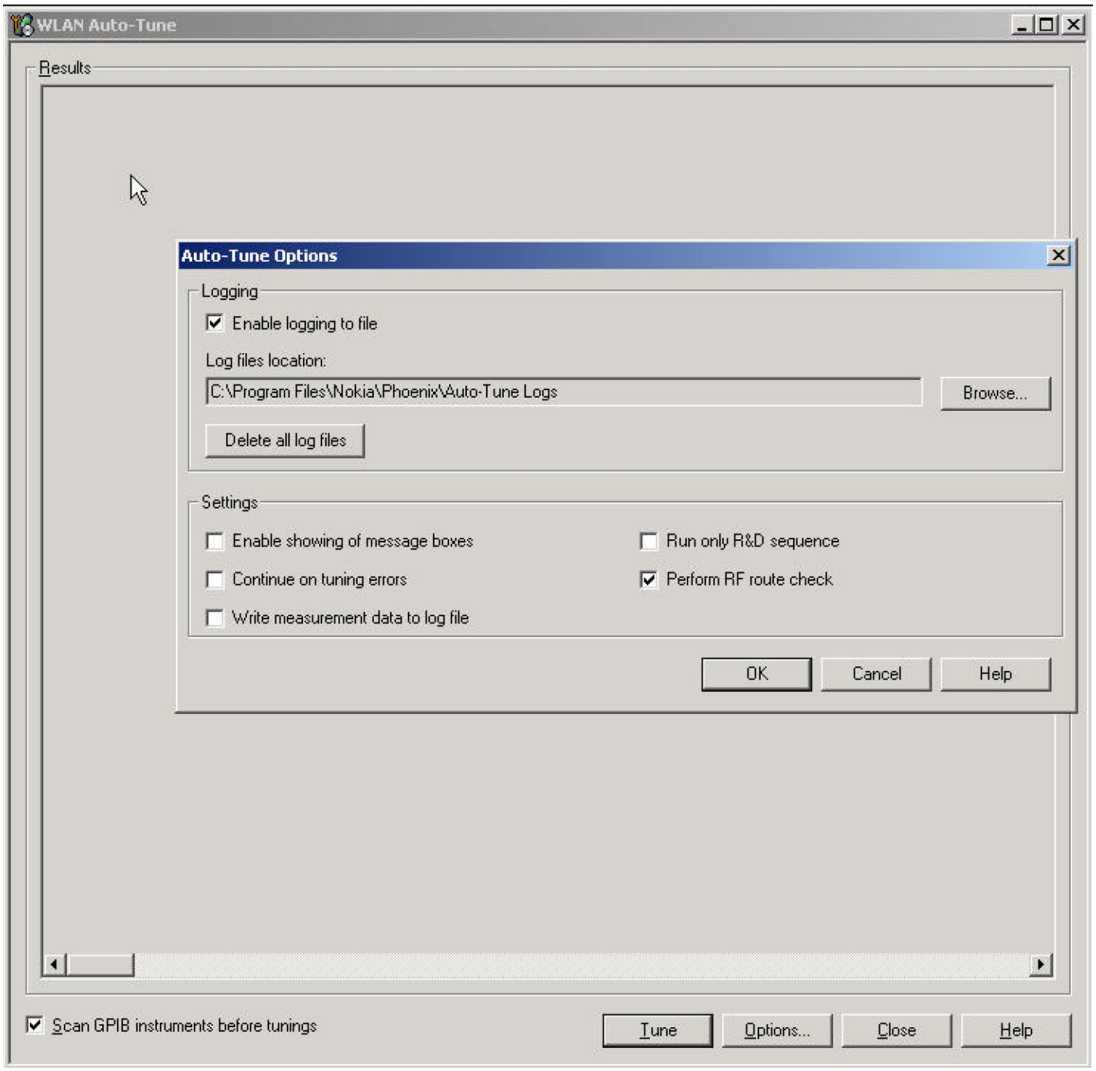

Figure 16 WLAN auto tune settings

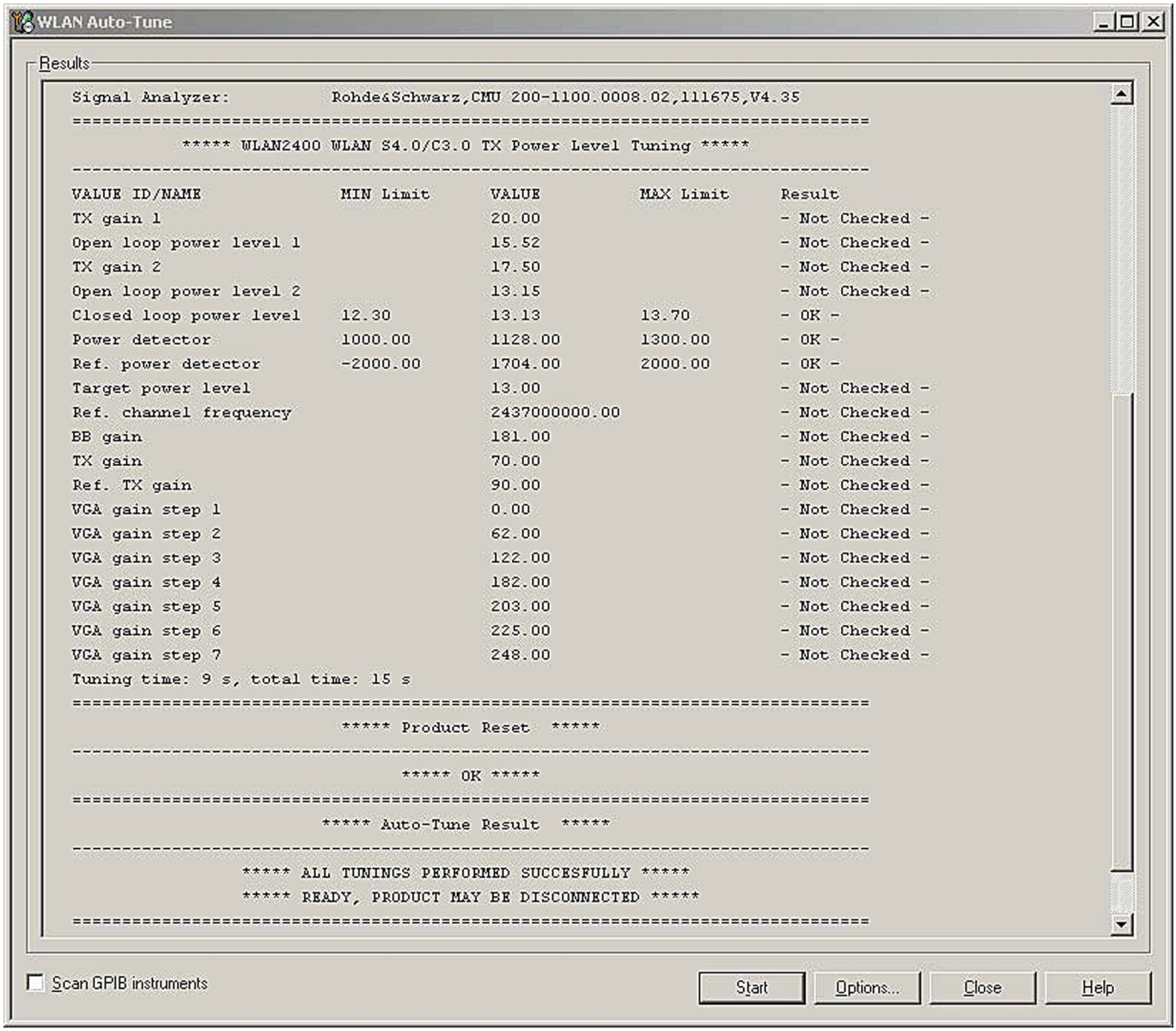

Figure 17 WLAN autotuning results

Baseband manual tuning guide

Certificate restoring

Context

This procedure is performed when the device certificate is corrupted for some reason.

All tunings (RF & Baseband, UI) must be done after performing the certificate restoring procedure.

Required equipment and setup:

- Latest *Phoenix* service software.
- “Tucson add on” package if one has been released between complete Phoenix releases
- FPS-10 or 21 Flash prommer updated with latest flash update package.
- Latest product specific data package, supporting for the variants you want to change the phones to. Certificate restoring without flashing does not require data packages to be installed

- SX-4 or SX-4T Smart Card, which has been registered for Tucson use in Nokia Online Security Device Master, and for which local Nokia Care has granted Tucson user rights
- BB 5.0 models:SS-46 with phone specific flash adapter connected to flash prommer
- DCT-4 models:JBV-1 with phone specific flash adapter connected to flash prommer
- Active online connection to internet, please refer to Technical Bulletins for IP addresses

Connection to Tucson online server:

- All requests are handled online. That means a permanent Internet connection is required. Previously used e-mail based system is no longer in use.
- Phoenix, when contacting Tucson server, is using IP address, **147.243.3.169 port 443**

Terms in Tucson:

- When certificate restoring for BB 5 products or IMEI rebuild for DCT-4 products is performed, existing data from Nokia System is programmed in the phone. The phone will be in the same condition as it was when it left the factory for the first time.
- If "Product Code Change" has been SUCCESSFULLY performed with Tucson after the phone left the factory, it will be restored back to the variant it was made into during Product Code change event.
- It is recommended to perform "Restore" function without selecting "Flash Product" – option to avoid possible SW downgrade which causes the phone to die.

The procedure for certificate restoring is the following:

Steps

1. Connect phone and scan product, read phone information to check communication with phone.
2. Open *Tools ->Menu*.
3. Provide Tucson password and PIN code which have been delivered to you by email. Please note that characters are case sensitive.

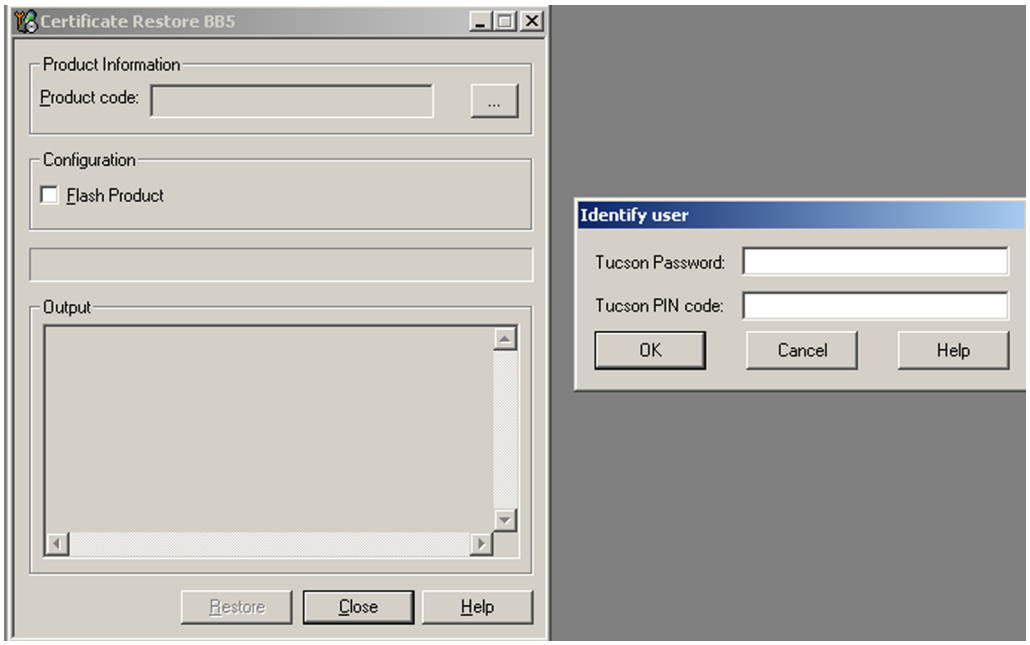

4. Select OK, Phoenix will read product information from phone.
5. Product code shown on the UI does not matter, because during restoring it will be replaced by the product code which is the latest one stored in Nokia system.

6. It is recommended to perform "Restore"-function without selecting "Flash Product"-option to avoid possible SW downgrade which causes the phone to die.

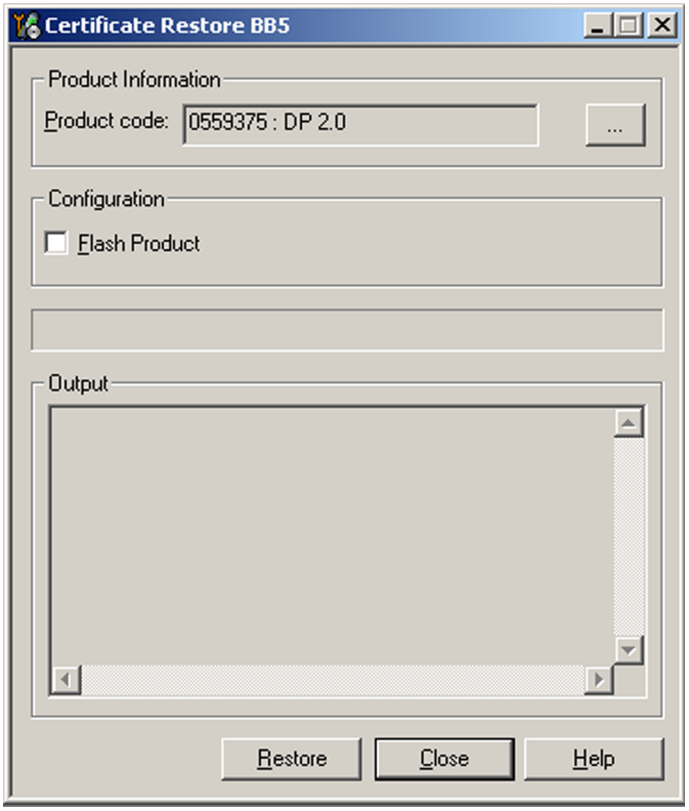

7. Information from phone and Smart Card are read and connection to Tucson server is established.

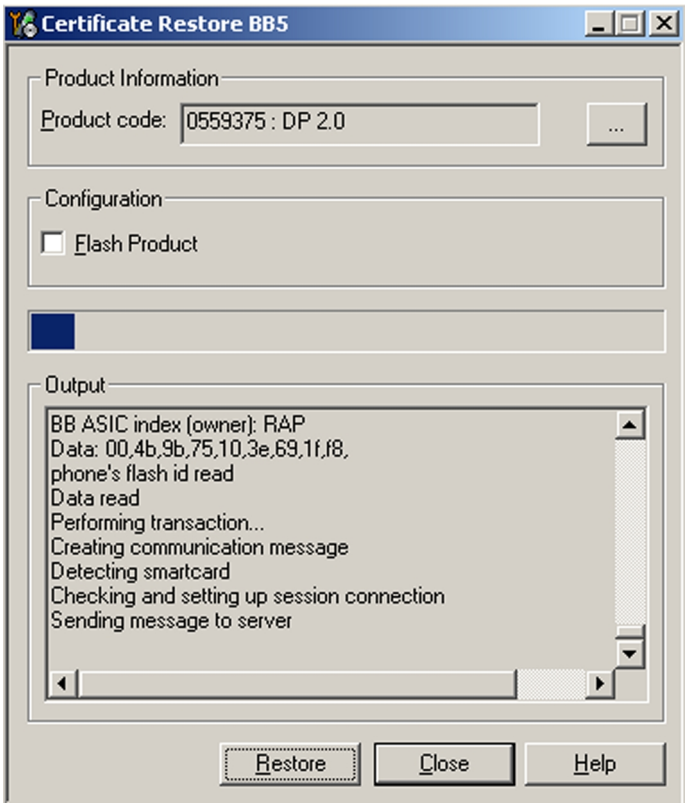

8. Information from Nokia system is retreived and programmed in the phone.

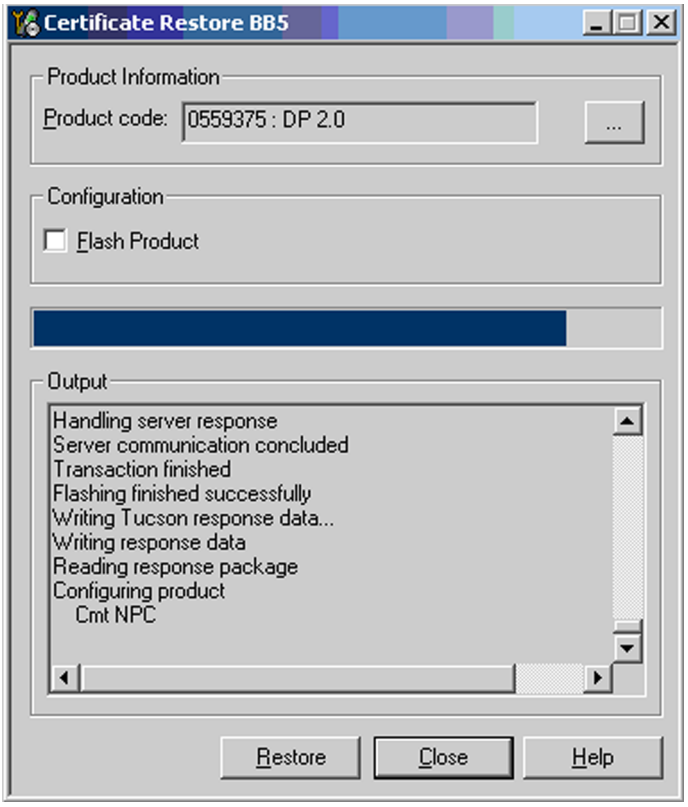

9. After programming, confirmation about successful event is sent to Nokia system.

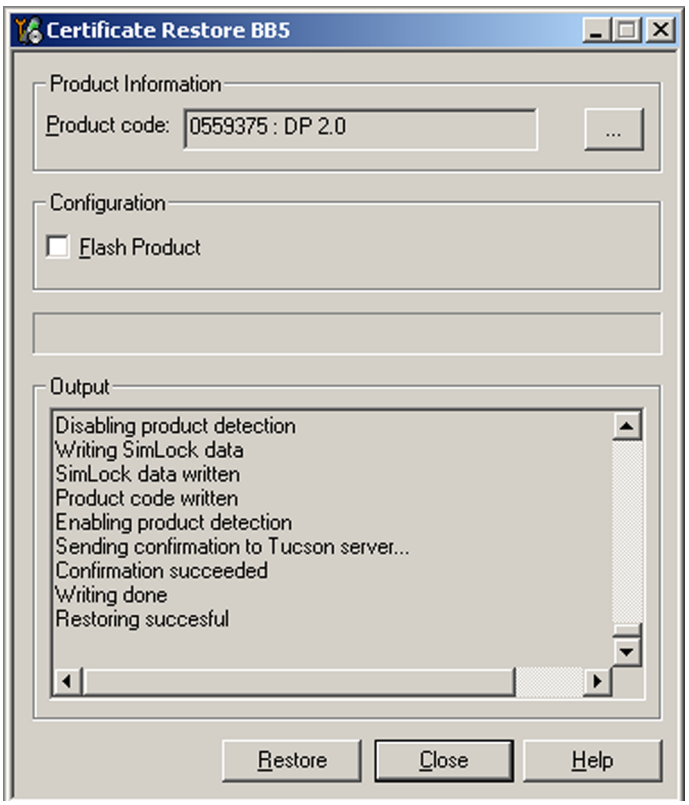

Next actions

After a successful rewrite, you must retune the phone completely by using *Phoenix* tuning functions.

Important: Perform all tunings: RF, BB, and UI.

Product code change

Context

- When Product Code change with Tucson is successfully performed, phone variant will be changed. Data for the new variant is extracted from Nokia System, and programmed in the phone.
- After successful change, phone specific information in Nokia systems will match the new variant, and it can be used for e.g. certificate restoring. If you perform several product code changes, Nokia system will always be up to date with the latest successful event.
- Failed / incomplete actions will not change the phone specific information in Nokia systems.
- This function can be performed with or without flashing the phone with correct software, selection can be made by checking / unchecking the tick box on Phoenix UI.

The procedure for product code change is the following:

Steps

1. Connect phone and scan product, read phone information to check communication with phone
2. Open *Tools -> Product Code Change*.
3. Provide Tucson password and PIN code which have been delivered to you by email. Please note that characters are case sensitive.

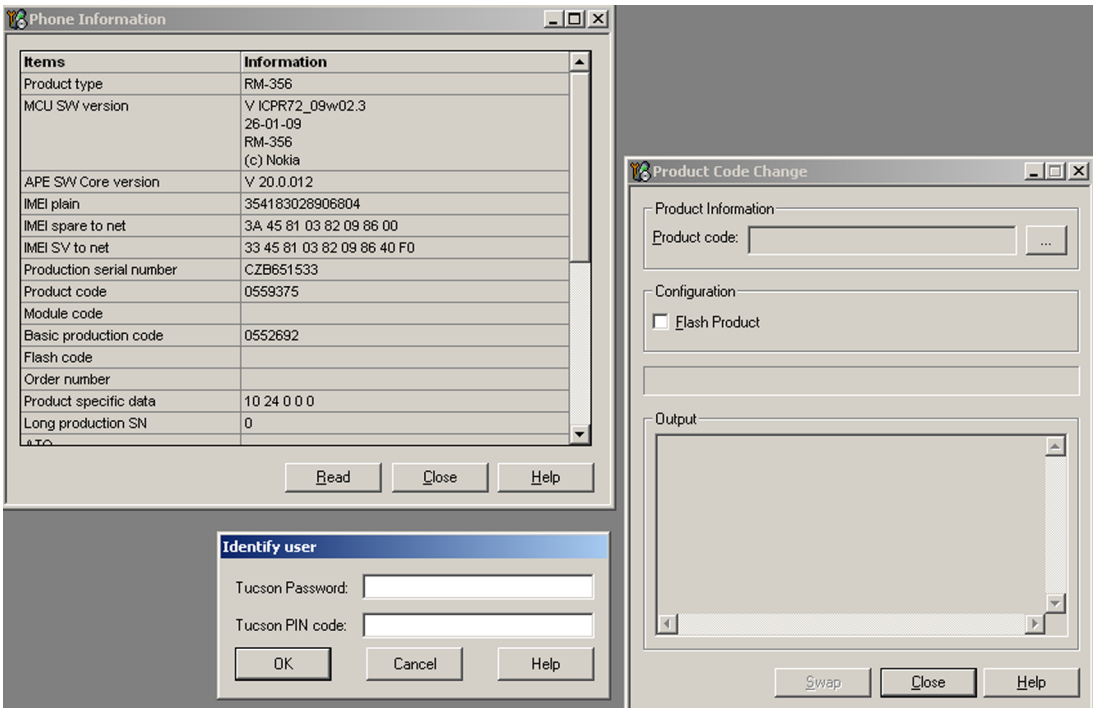

4. Select product code of new variant from list. If the product code you want is not shown, please install correct data package including the variant.

5. Select “OK” and “SWAP”.

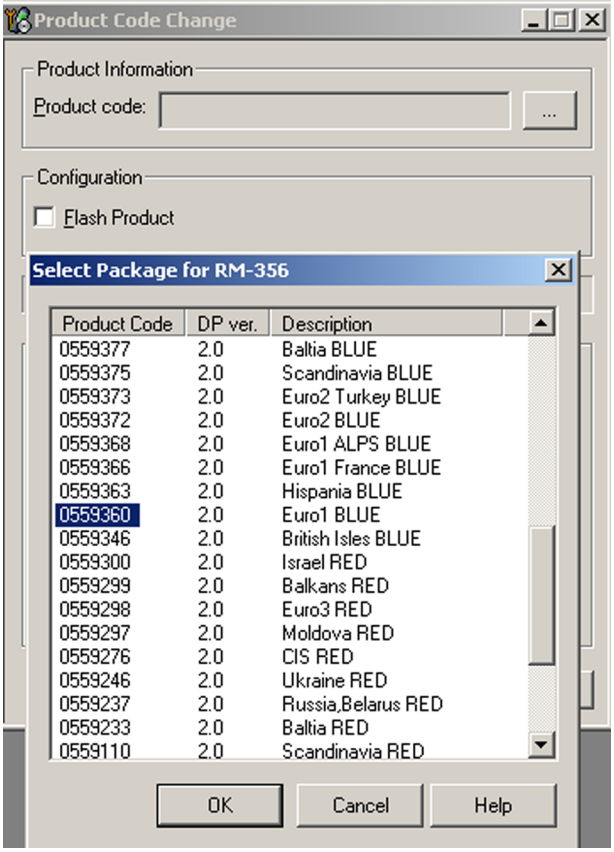

6. Information from phone is read and connection to Tucson server is established.

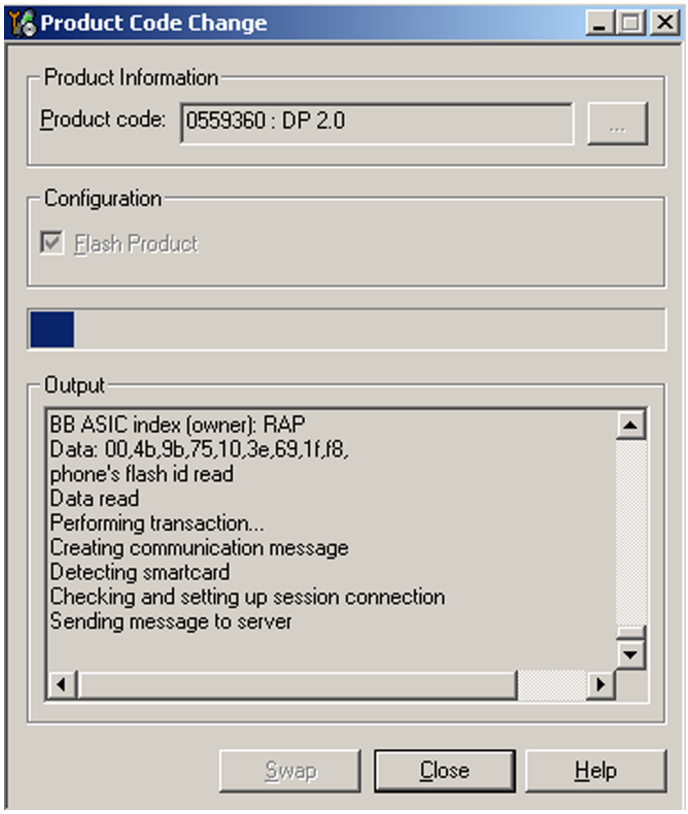

7. If “Flash Product” – option was selected, phone SW is programmed.

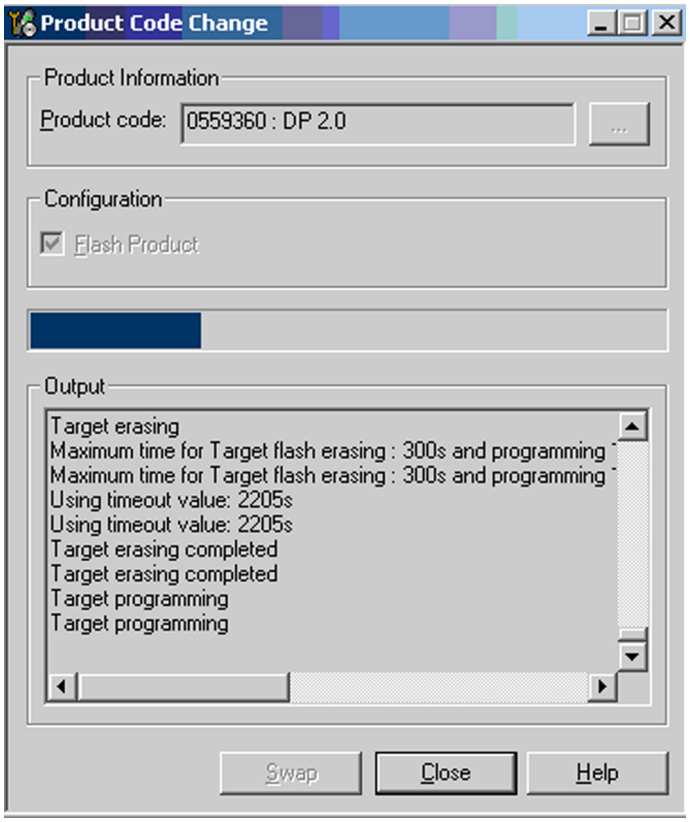

8. New data retrieved from Nokia system is programmed in the phone.

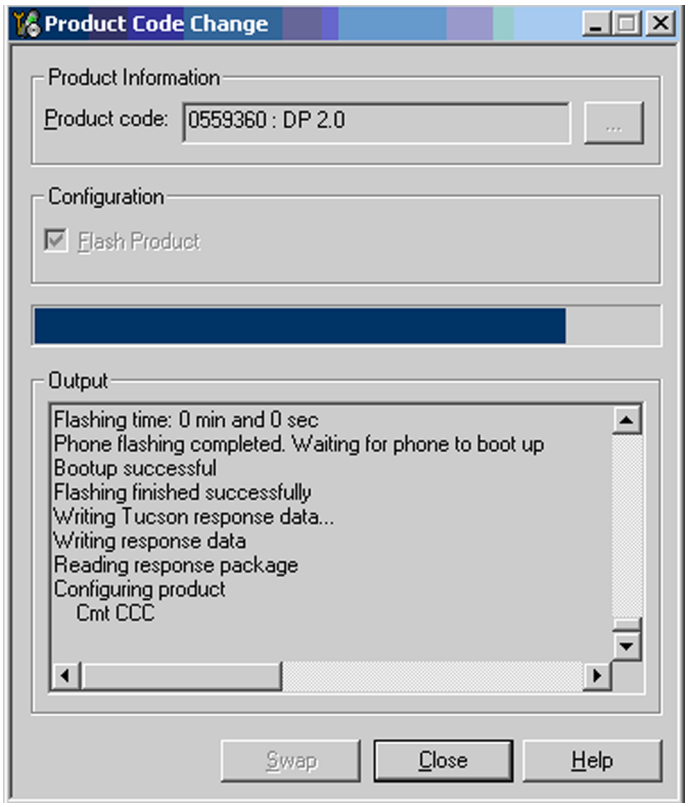

9. Confirmation about successful event is sent to Nokia system.

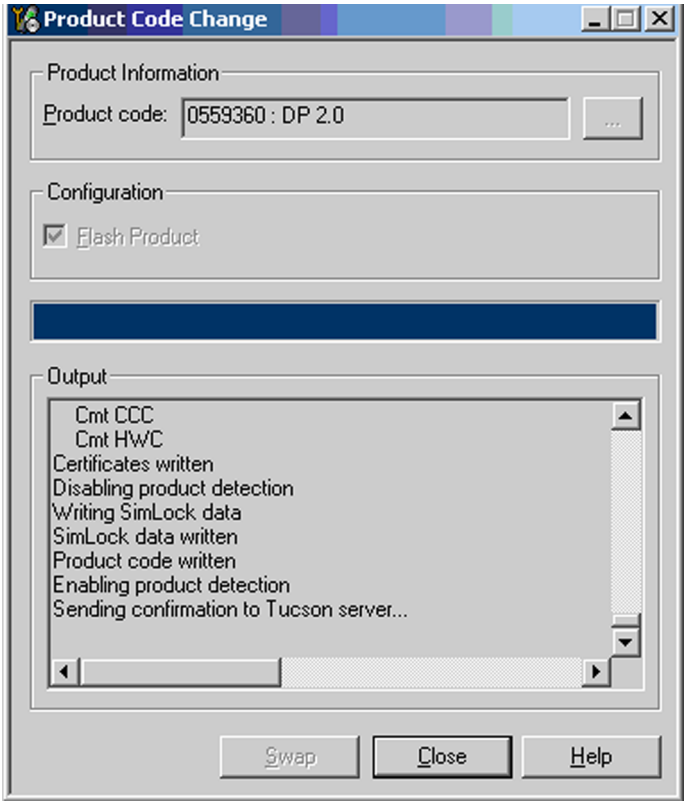

10. Phone has now been changed to another variant. If there is need to restore the data, this information will be sent back to phone. Warranty information in NOL will show the current information in about 24 hours.

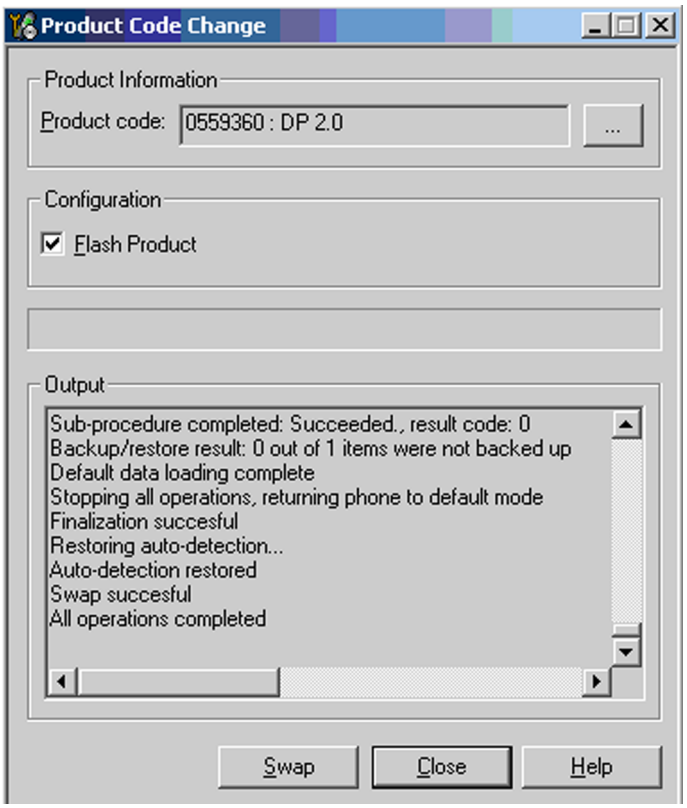

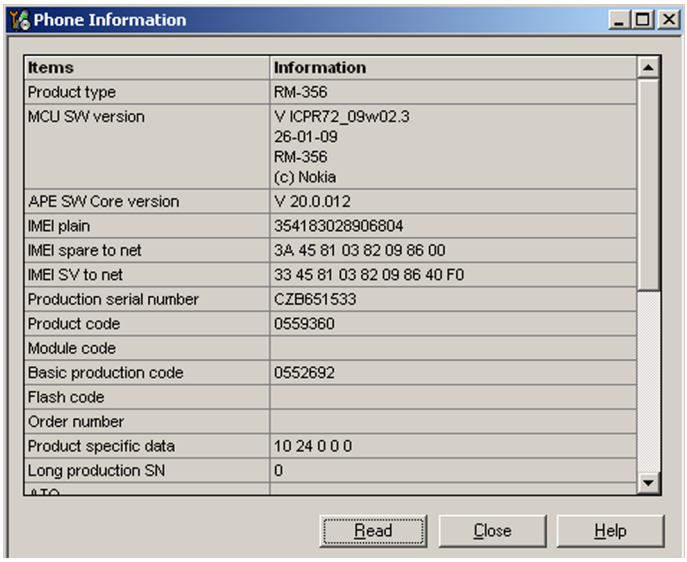

Items	Information
Product type	RM-356
MCU SW version	V ICPR72_09w02.3 26-01-09 RM-356 (c) Nokia
APE SW Core version	V 20.0.012
IMEI plain	354183028906804
IMEI spare to net	3A 45 81 03 82 09 86 00
IMEI SV to net	33 45 81 03 82 09 86 40 F0
Production serial number	CZB651533
Product code	0559360
Module code	
Basic production code	0552692
Flash code	
Order number	
Product specific data	10 24 0 0 0
Long production SN	0

Energy management calibration

Prerequisites

Energy Management (EM) calibration is performed to calibrate the setting (gain and offset) of AD converters in several channels (that is, **battery voltage**, **BSI**, **battery current**) to get an accurate AD conversion result.

Hardware setup:

- An external power supply is needed.
- Supply 12V DC from an external power supply to CU-4 to power up the phone.
- The phone must be connected to a CU-4 control unit with a product-specific flash adapter.

Steps

1. Place the phone to the docking station adapter (CU-4 is connected to the adapter).
2. Start *Phoenix* service software.
3. Choose **File** → **Scan Product.**
4. Choose **Tuning** → **Energy Management Calibration.**
5. To show the current values in the phone memory, click **Read**, and check that communication between the phone and CU-4 works.
6. Check that the **CU-4 used** check box is checked.
7. Select the item(s) to be calibrated.

   Note: ADC calibration has to be performed before other item(s). However, if all calibrations are selected at the same time, there is no need to perform the ADC calibration first.
8. Click **Calibrate**.

   The calibration of the selected item(s) is carried out automatically.

   The candidates for the new calibration values are shown in the *Calculated values* column. If the new calibration values seem to be acceptable (please refer to the following "Calibration value limits" table), click **Write** to store the new calibration values to the phone permanent memory.

Table 9 Calibration value limits

Parameter	Min.	Max.
ADC Offset	-30	+40

Parameter	Min.	Max.
ADC Gain	12000	14000
BSI Gain	1100	1350
VBAT Offset	2635	2755
VBAT Gain	14900	15900
VCHAR Gain	N/A	N/A
IBAT (ICal) Gain	7750	12250

9. Click **Read**, and confirm that the new calibration values are stored in the phone memory correctly. If the values are not stored to the phone memory, click **Write** and/or repeat the procedure again.
10. To end the procedure, close the *Energy Management Calibration* window.

(This page left intentionally blank.)

4 — RF troubleshooting

(This page left intentionally blank.)

Table of Contents

List of Figures

(This page left intentionally blank.)

General RF troubleshooting

Introduction to RF troubleshooting

Most RF semiconductors are static discharge sensitive

ESD protection must be applied during repair (ground straps and ESD soldering irons).

Pre-baking

These parts are moisture sensitive and must be pre-baked prior to soldering:

- VAPAUS RFIC (N7500)
- TX FEM (N7520)
- WCDMA PA (N7540)
- Mikki DC/DC converter (N7560)

Discrete components

In addition to the key components, there are a number of discrete components (resistors, inductors and capacitors) for which troubleshooting is done mainly by *visual inspection*.

Capacitors: check for short circuits.

Resistors: check value with an ohm meter.

Note: In-circuit measurements should be evaluated carefully.

Measuring equipment

All measurements should be done using:

- Module jig MJ-264
- Flash adapter FS-145
- Control unit CU-4/Interface adapter SS-46
- An oscilloscope for low frequency and DC measurements. Recommended probe: 10:1, 10MOhm/8pF.
- A radio communication tester including RF generator and spectrum analyser, for example Rohde & Schwarz CMU200. (Alternatively a spectrum analyser and a RF generator can be used. However, some tests in this guide are not possible to perform if this solution is chosen).

  Note: A mobile phone WCDMA transmitter should never be tested with full TX power (only if it is possible to perform the measurement in a good RF-shielded room). Even low power WCDMA transmitters may disturb nearby WCDMA networks and cause problems to 3G cellular phone communication in a wide area.

  Note: All measurements with an RF coupler should be performed in an RF-shielded environment because nearby base stations can disturb sensitive receiver measurements. If there is no possibility to use RF shielded environment, testing at frequencies of nearby base stations should be avoided.

Level of repair

The scope of this guideline is to verify functionality of the cellular RF block without removing RF shield.

Instructions for finding the faulty component are provided in some cases, but the whole RF block still needs to be replaced even when a single component is faulty.

RF key components

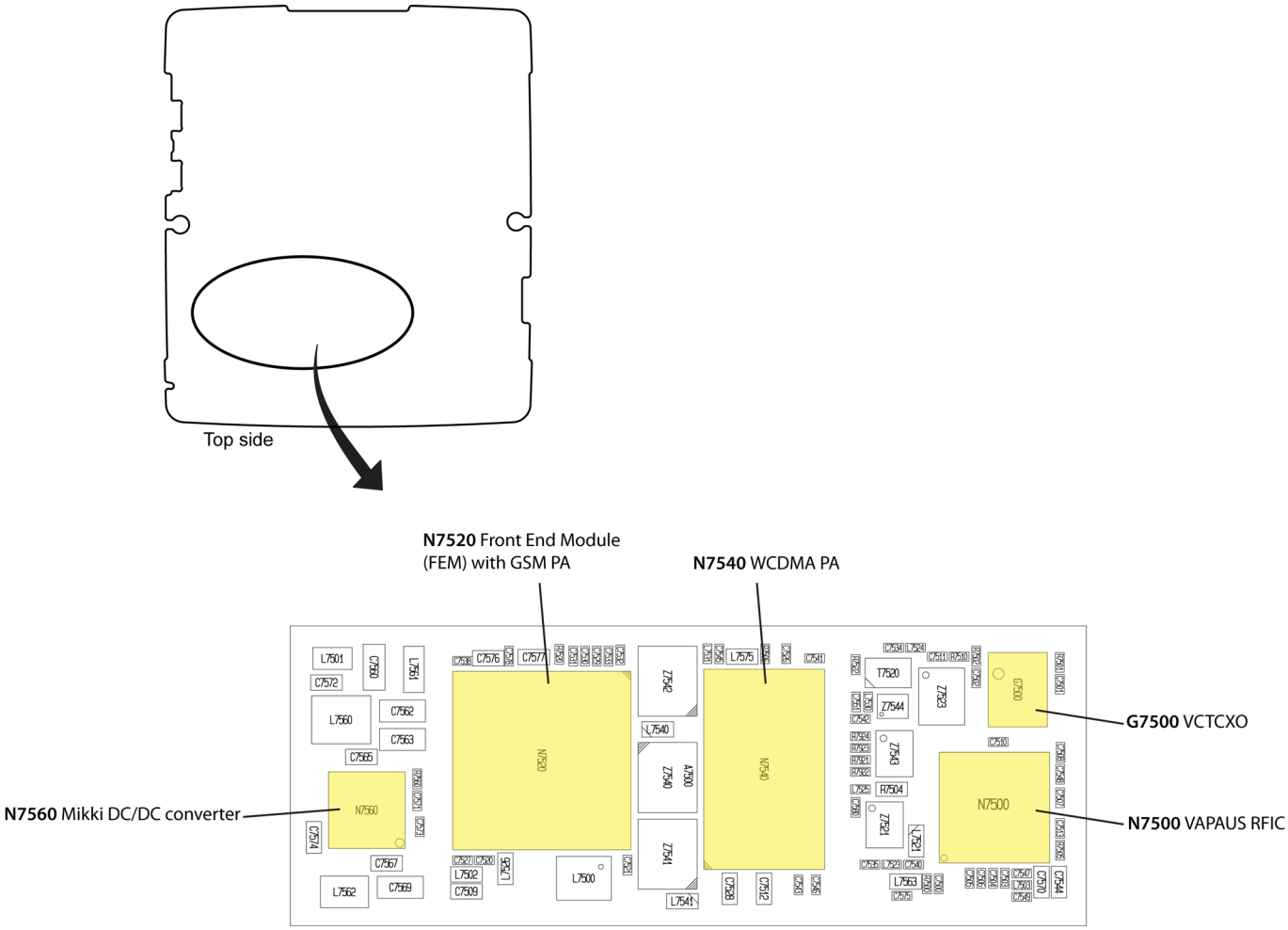

Figure 18 RF key components

Auto tuning

Introduction to auto tuning

This phone can be tuned automatically.

Auto tune is designed to align the phone's RF part easier and faster. It performs calibrations, tunings and measurements of RX and TX. The results are displayed and logged in a result file, if initiated.

Hardware set up

Hardware requirements for auto tuning:

- PC (Windows 2000/XP) with GPIB card
- PK-1/PDK-1 service dongle
- Power supply
- Product specific module jig
- Cables: RF cable XRS-6, USB cable, GBIP cable and MBUS cable DAU-9S
- Signal analyser (TX), signal generator (RX) and RF-splitter or one device including all.

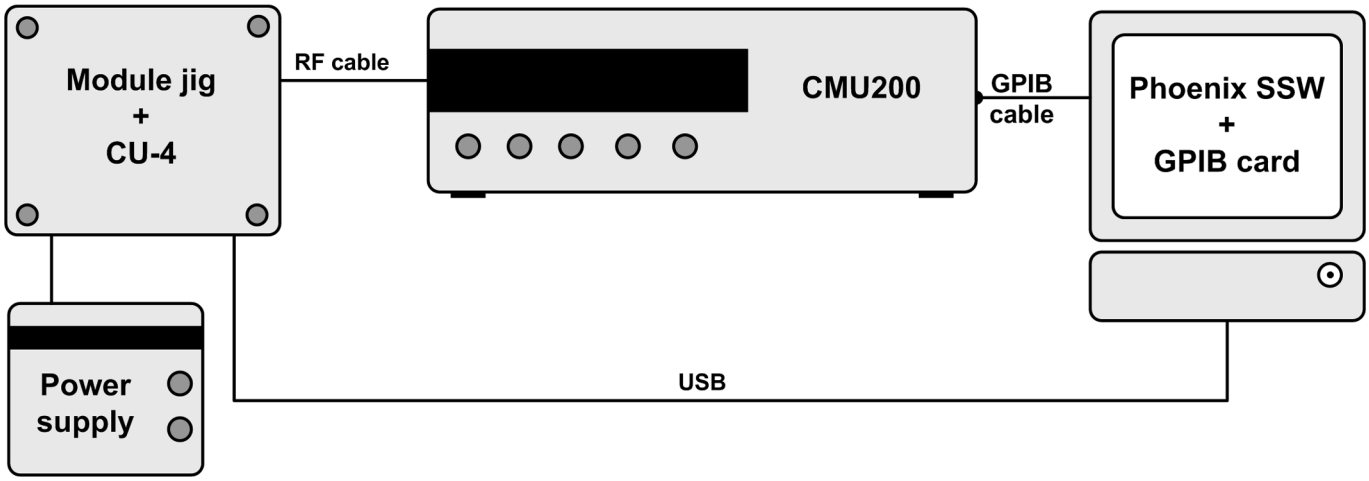

Figure 19 Auto tuning concept with CMU200

Auto tuning procedure

Prerequisites

Install the phone-specific data package, e.g. *Nokia_firmware_RM_627_xxx_v1.00.exe*.

The data package defines the phone-specific settings.

Steps

1. Make sure the phone (in the jig) is connected to the equipment. Else, some menus will not be shown in Phoenix.
2. Go to loss settings by selecting **Tuning (Alt_U)** → **SET LOSS** from the menu.
3. Set the loss between CMV200 and the phone. (Total loss = cable + jig)
4. Go to auto tuning by selecting **Tuning (Alt_U)** → **Auto-tune (Alt_A)** from the menu.
5. Start auto tuning by clicking the **Tune** button.

Self test troubleshooting

Phoenix self test troubleshooting

Context

Always start the troubleshooting procedure by running the Phoenix self tests. If a test fails, please follow the diagram below.

If the phone is dead and you cannot perform the self tests, go to Dead or jammed device troubleshooting (page 4–7) in chapter 3, Baseband troubleshooting and manual tuning guide.

> **Note:** Self tests are recommended to be made when phone is in jig and a 50Ω load connected to the RF connector. Otherwise power tests may fail depending on antenna load

Troubleshooting flow

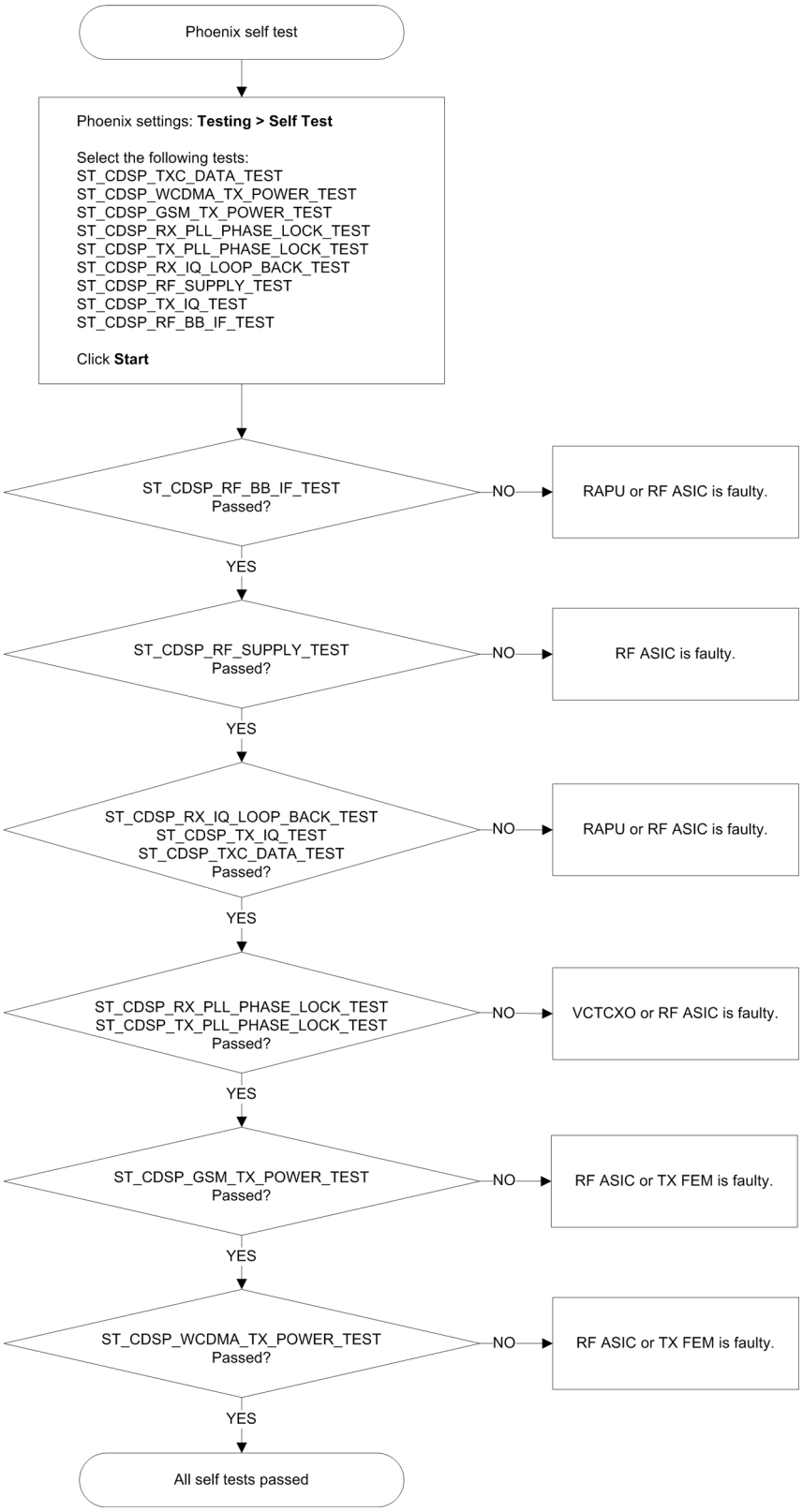

Receiver troubleshooting

Introduction to receiver (RX) troubleshooting

RX can be tested by making a phone call or in local mode. For the local mode testing, use Phoenix service software.

The main RX troubleshooting measurement is RSSI reading. This test measures the signal strength of the received signal. For GSM RSSI measurements, see section GSM RX chain activation for manual measurements/ GSM RSSI measurement (page 4–9) . For a similar test in WCDMA mode, see section WCDMA RSSI measurement (page 4–12) .

The RX path for GSM and WCDMA are using the same filters in some bands. Please refer to RF components reference (page 4–26) for details.

GSM RX chain activation for manual measurements/GSM RSSI measurement

Prerequisites

Make the following settings in signal generator and Phoenix service software:

Setting	GSM850	GSM900	GSM1800	GSM1900
Phoenix Channel	190	37	700	661
Signal generator to antenna connector	881.46771MHz (67.71kHz offset) at -60dBm	942.46771MHz (67.71kHz offset) at -60dBm	1842.86771MHz (67.71kHz offset) at -60dBm	1960.06771MHz (67.71kHz offset) at -60dBm

Steps

1. Set the phone to local mode.
2. Activate RSSI reading in Phoenix by selecting **Testing** → **GSM** → **RSSI reading** .

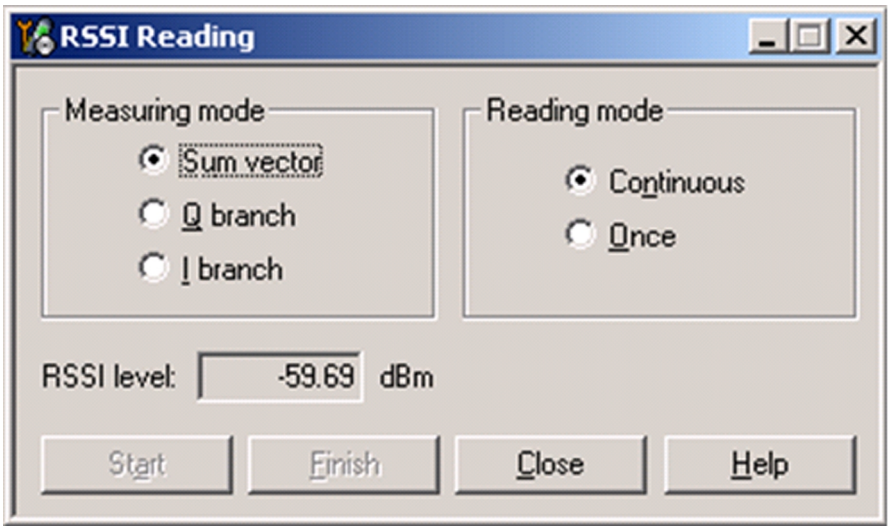

Figure 20 Phoenix RSSI Reading window

Results

The reading should reflect the level of the signal generator (minus losses) ±5dB.

When varying the level in the range -30 to -102dBm the reading should then follow within ±5dB.

GSM receiver troubleshooting flowchart

Troubleshooting flow

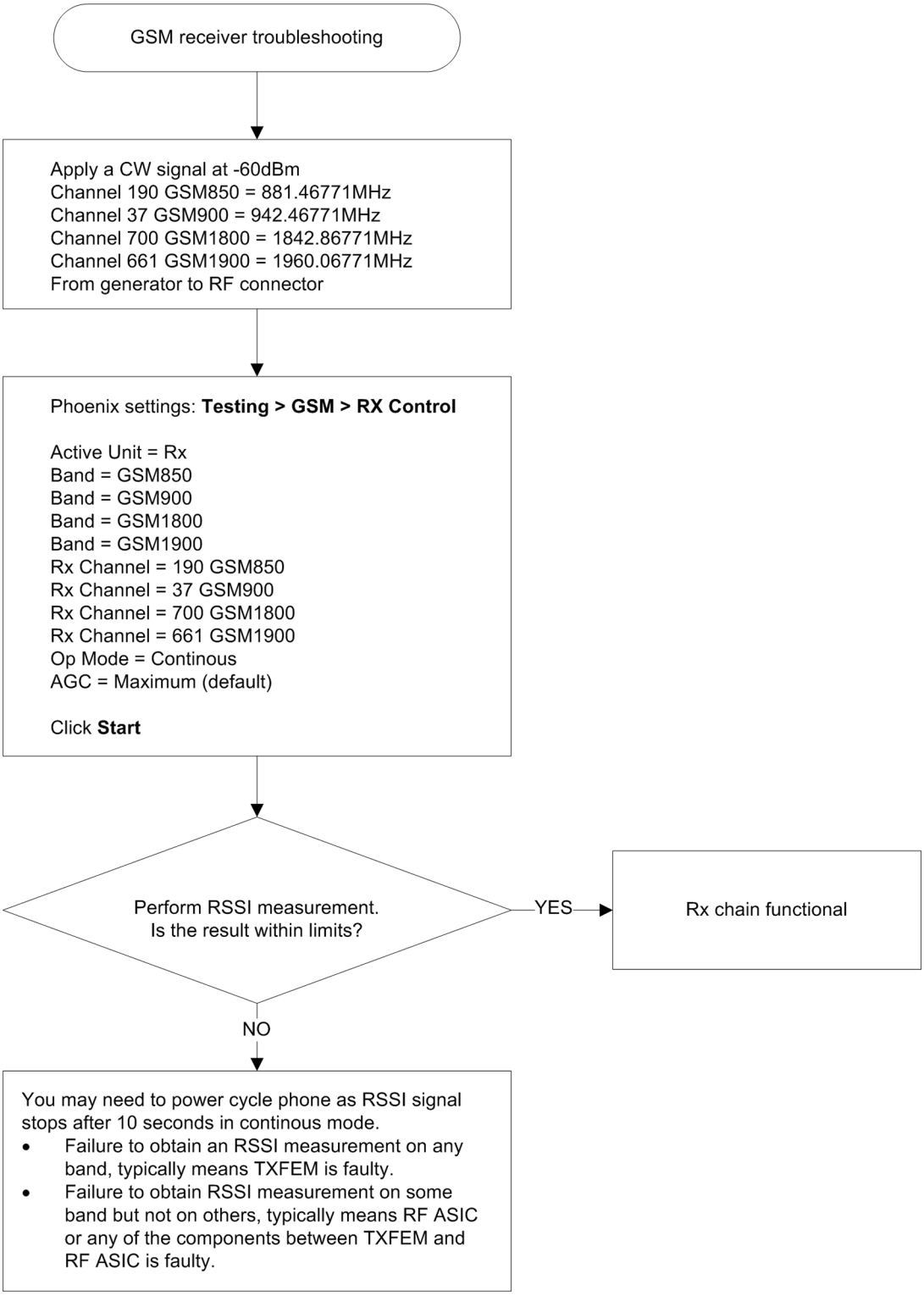

WCDMA RX chain activation for manual measurement

Steps

1. In Phoenix, select **Testing** → **WCDMA** → **Rx Control** . The Phoenix Rx Control window opens.

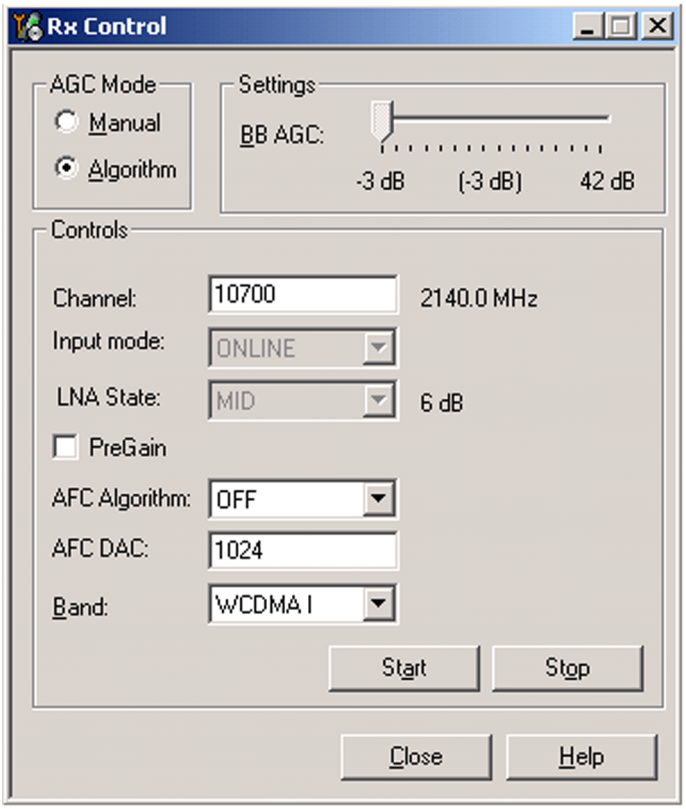

Figure 21 Phoenix Rx Control window with sample settings (WCDMA band I)

2. Make settings for the band to be tested according to the following table:

Band to be tested	Phoenix Channel	Signal generator to antenna connector
WCDMA I	10700	2141.0MHz
WCDMA II	9800	1961.0MHz
WCDMA VIII	3013	943.6MHz

3. Make the following general settings (the same values for all bands):

Setting	Value
AGC Mode	Algorithm
AFC Algorithm	OFF
AFC DAC	1024

4. Click **Start** to activate the settings.

   If the settings are changed later on (for example, change of channel) you have to click **Stop** and **Start** again.

Note: Clicking **Stop** also disables TX control if it was active.

WCDMA RSSI measurement

Prerequisites

WCDMA RX must be activated before RSSI can be measured. For instructions, please refer to WCDMA RX chain activation for manual measurement (page 4–11) .

Connect signal generator to RF connector and use appropriate frequency for each channel.

Steps

1. In Phoenix select **Testing** → **WCDMA** → **RX Power measurement** . The Rx Power Measurement window opens.

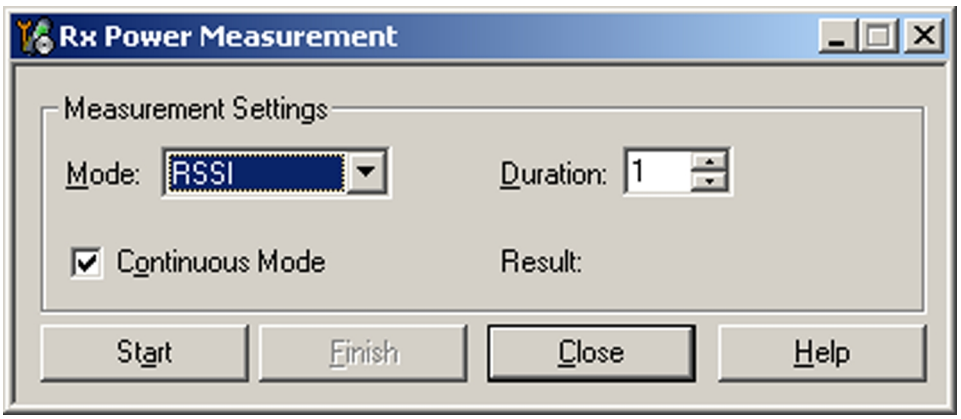

Figure 22 Phoenix Rx Power Measurement window

2. In the RX Power measurement window, select:
   - Mode: RSSI
   - Continuous mode
3. Click **Start** to perform the measurement.

   Note: WCDMA RSSI measurement is accurate only with WCDMA modulated signal.

WCDMA receiver troubleshooting flowchart

Troubleshooting flow

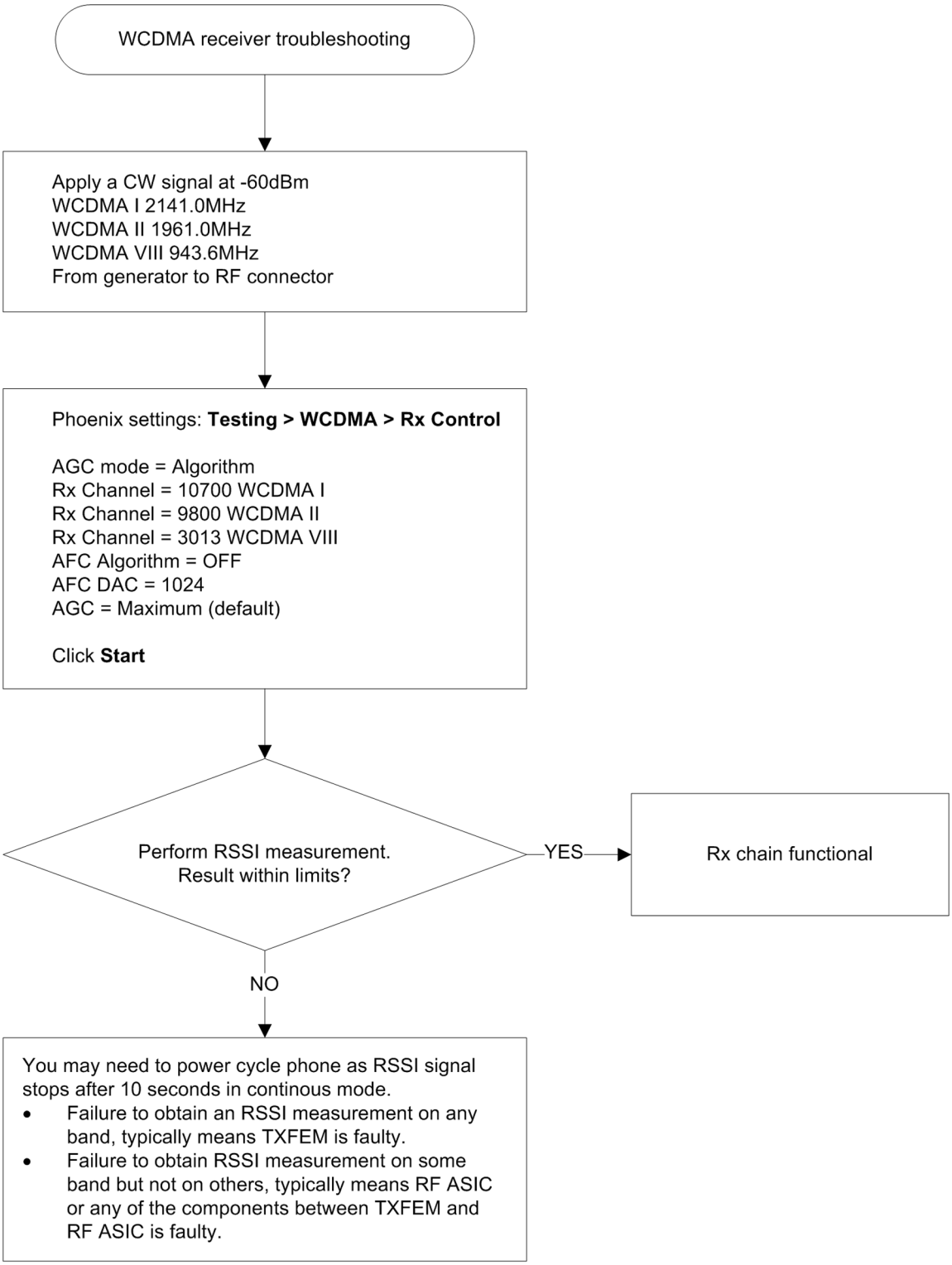

Transmitter troubleshooting

Introduction to transmitter (TX) troubleshooting

Please note the following before performing transmitter tests:

- TX troubleshooting requires TX operation.
- Do not transmit on frequencies that are in use!
- The transmitter can be controlled in local mode for diagnostic purposes.
- The most useful Phoenix tool for GSM transmitter testing is “RF Control”; in WCDMA transmitter testing the best tool is “TX Control”.
- Remember that re-tuning is not a fix! Phones are tuned correctly in production.
- The RX path for GSM and WCDMA are using the same filters in some bands. Please refer to RF components reference (page 4–26) for details.

Note: Never activate the GSM or WCDMA transmitter without a proper antenna load. Always connect a 50Ω load to the RF connector (antenna, RF-measurement equipment or at least a 2W dummy load); otherwise the GSM or WCDMA Power amplifier (PA) may be damaged.

GSM transmitter troubleshooting

Steps

1. Set the phone to local mode.
2. In Phoenix, select **Testing** → **GSM** → **Rf Controls** . The RF Controls window opens.

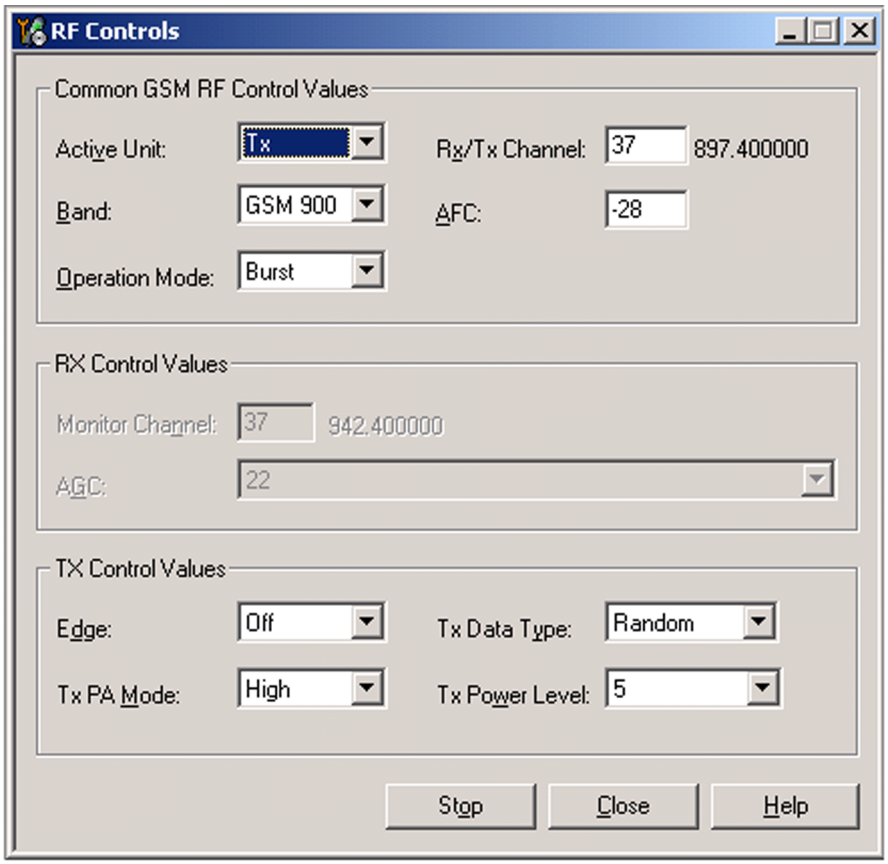

Figure 23 Phoenix RF Controls window

3. Make the following settings:

Setting	Value
Active Unit	Tx
Rx/Tx Channel	37
Band	GSM 900
AFC	-28
Operation Mode	Burst
Edge	Off
Tx Data Type	Random
Tx PA Mode	High
Tx Power Level	5

4. Check the basic TX parameters, using a communication analyser (e.g. CMU200).
   - Power
   - Phase error
   - Modulation
   - Switching spectrum

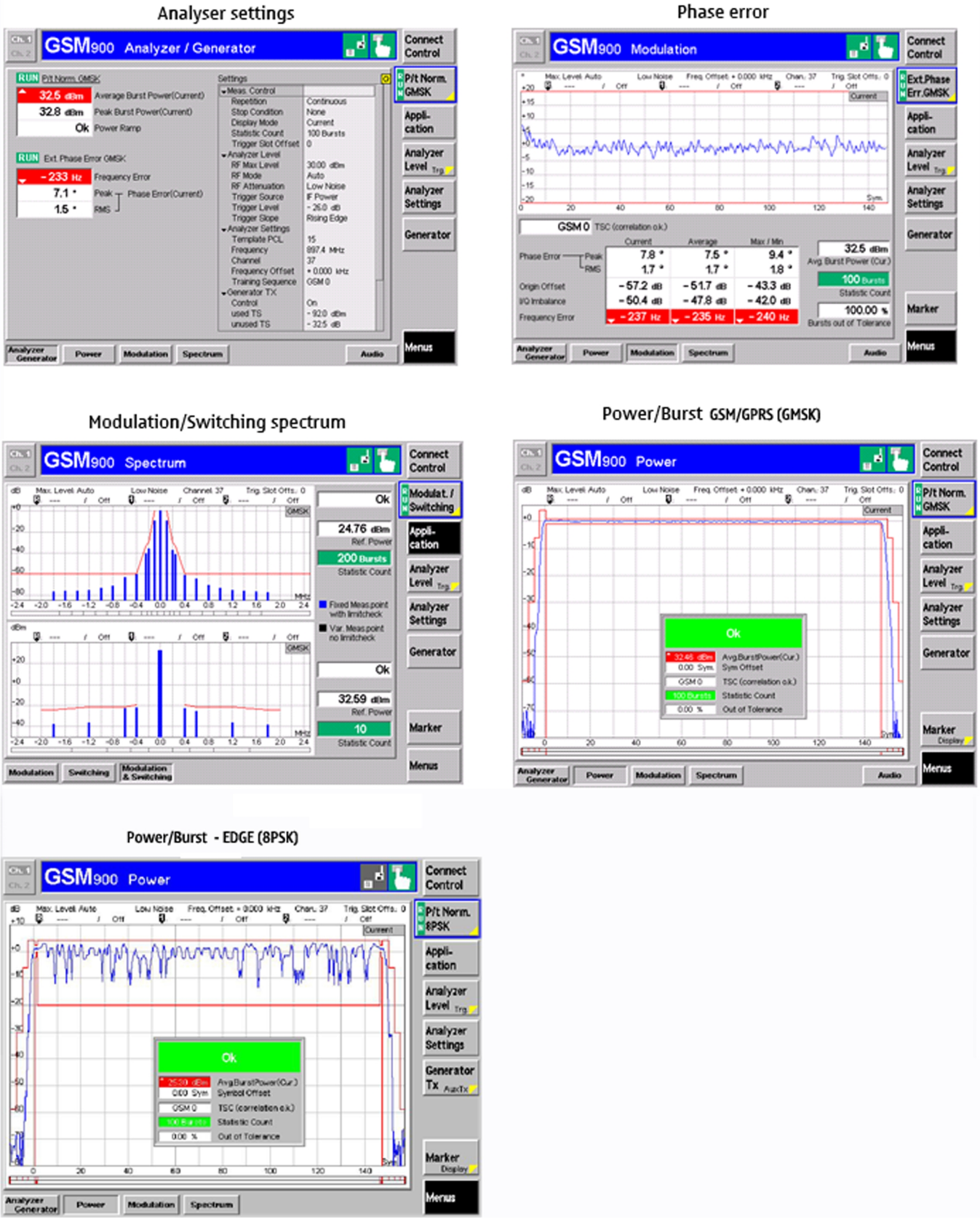

Figure 24 Typical readings

5. Change the power level in RF controls window and make sure the power reading follows accordingly.

Next actions

You can troubleshoot the GSM transmitter for each GSM band separately, one band at a time. If you want to troubleshoot GSM850, GSM1800 or GSM1900, change the band in the RF controls window and set the communication analyser accordingly.

GSM transmitter troubleshooting flowchart

Troubleshooting flow

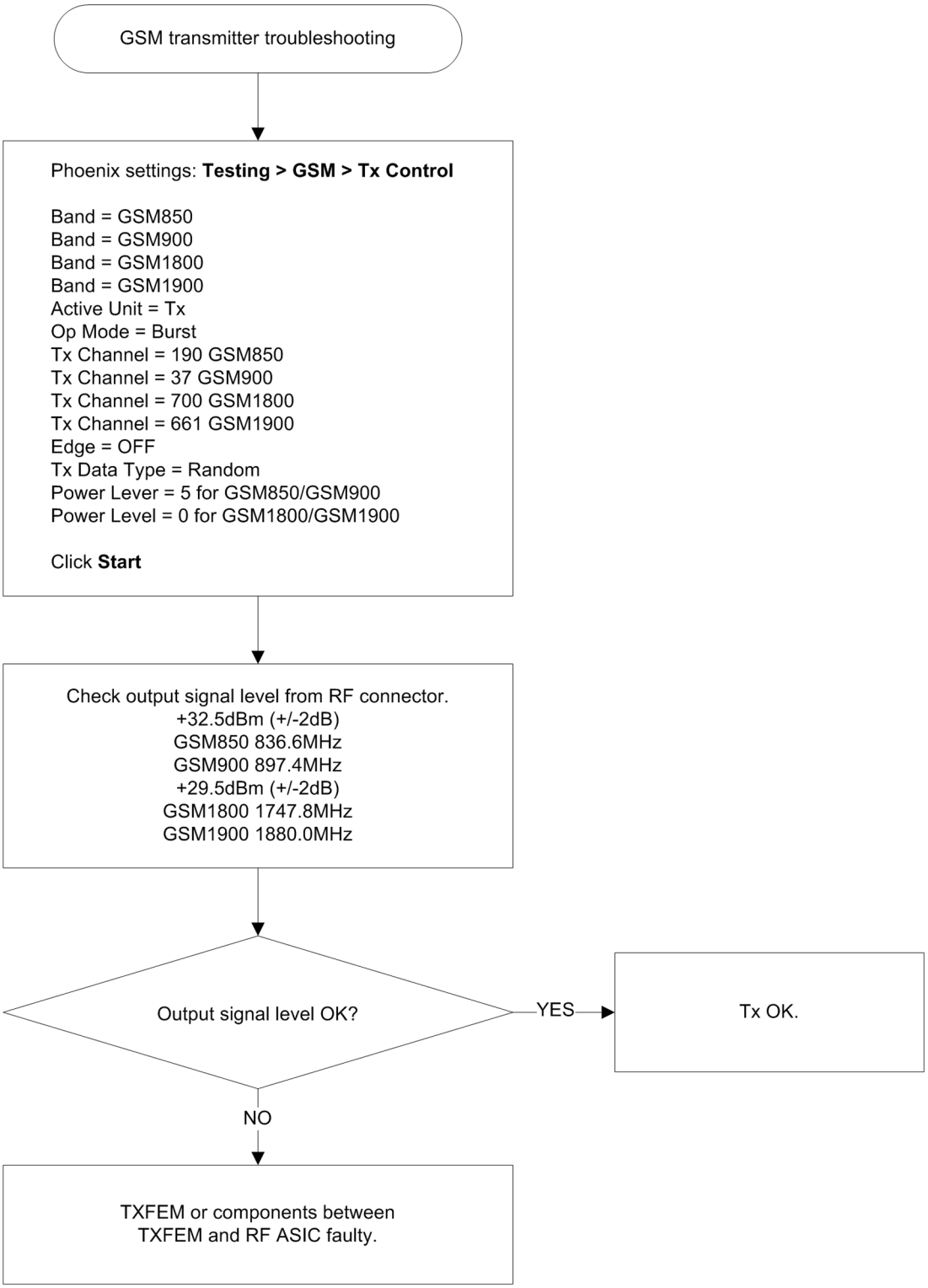

WCDMA transmitter troubleshooting

Steps

1. Set the phone to local mode.
2. In Phoenix, select **Testing** → **WCDMA** → **Tx control** . The Tx Control window opens.

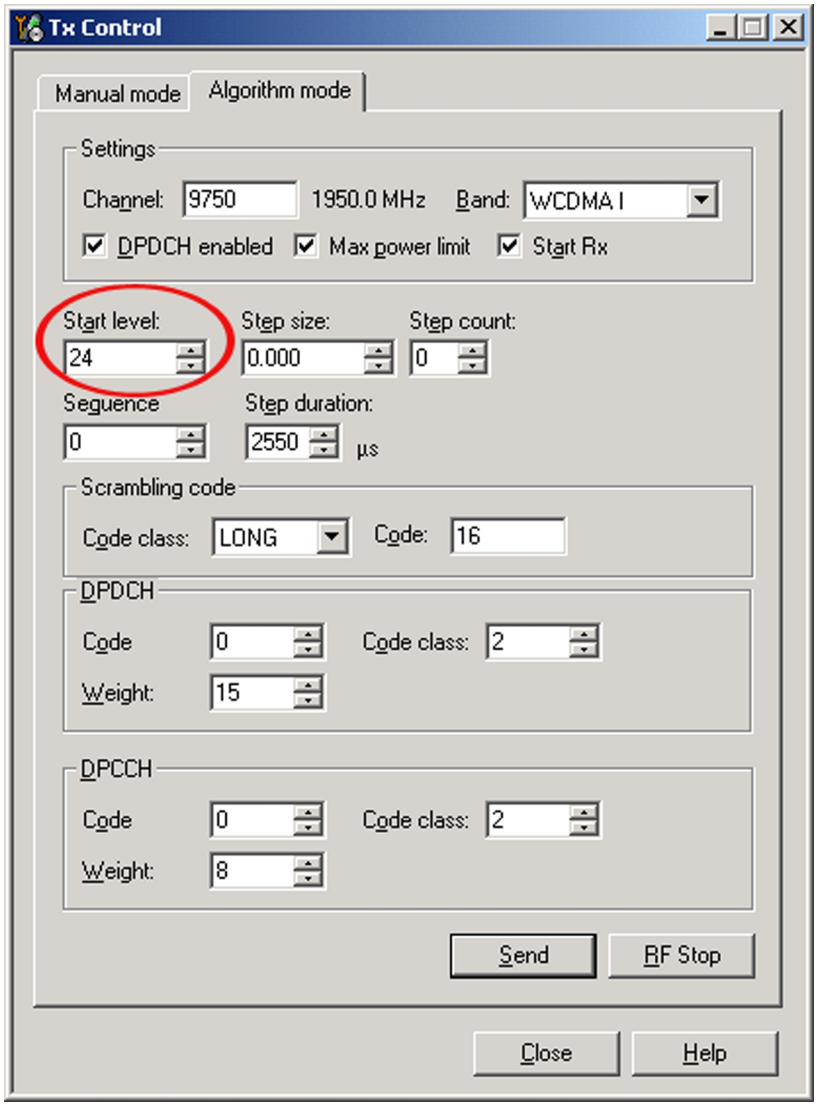

Figure 25 Phoenix WCDMA Tx control window

3. Make settings for the band to be tested, according to the following table:

Band	Channel
WCDMA I	9750
WCDMA II	9400
WCDMA VIII	2788

4. Make the following general settings (the same values for all bands). Note that Max power limit is not checked by default.

Setting	Value
DPDCH enabled	Checked
Max power limit	Checked
Start Rx	Checked
Start level	24
Step size	0
Step count	0
Sequency	0
Step duration	2550
Code class	LONG
Code	16
DPDCH code	0
Weight	15
Code class	2
DPCCH code	0
Weight	8
Code class	2

Note: Use the **Start level** option to set the TX power level.

5. Click **Send** to enable the settings and activate TX.
   If settings are changed (eg. new channel selected), you have to click **RF Stop** and **Send** again.
6. Check the basic TX parameters using a communication analyser (e.g. CMU200).

Power

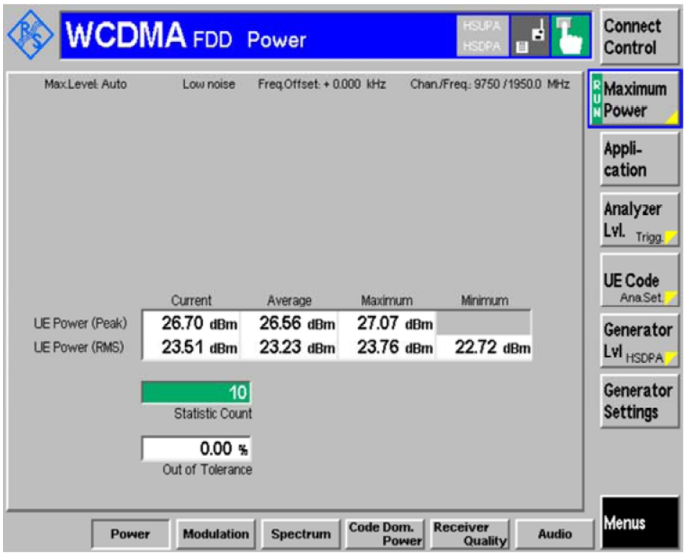

Spectrum - Emission Mask

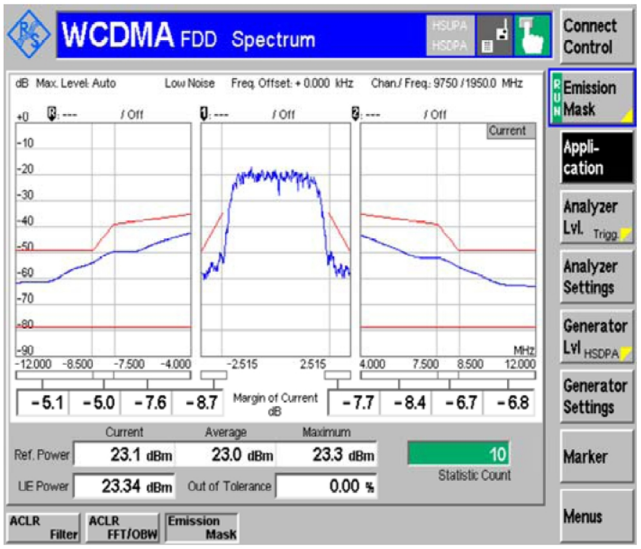

Spectrum - ACLR (FFT/OBW)

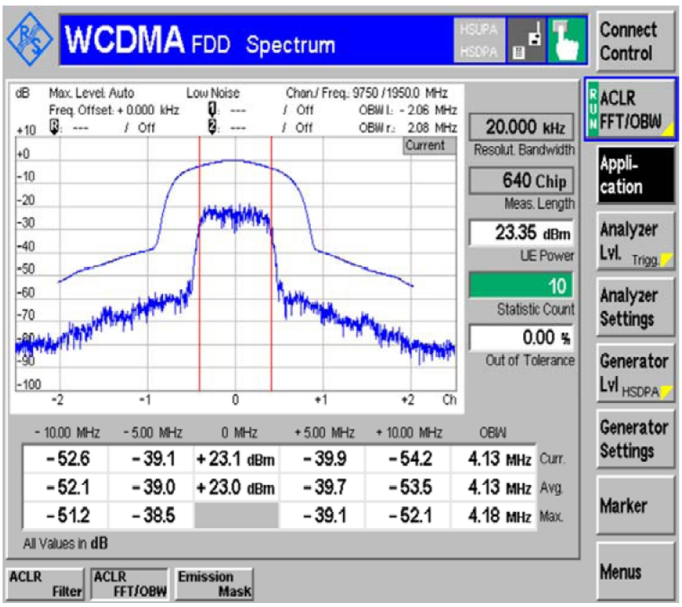

Spectrum - ACLR (Filter)

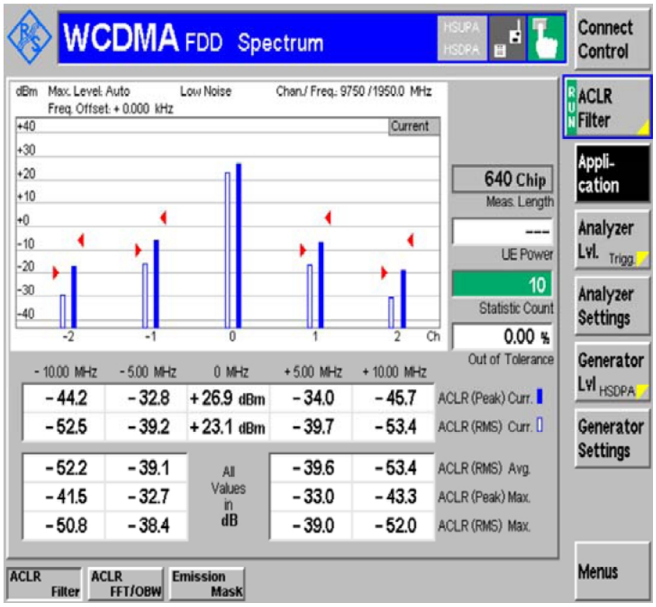

Figure 26 Typical readings

WCDMA transmitter troubleshooting flowchart

Troubleshooting flow

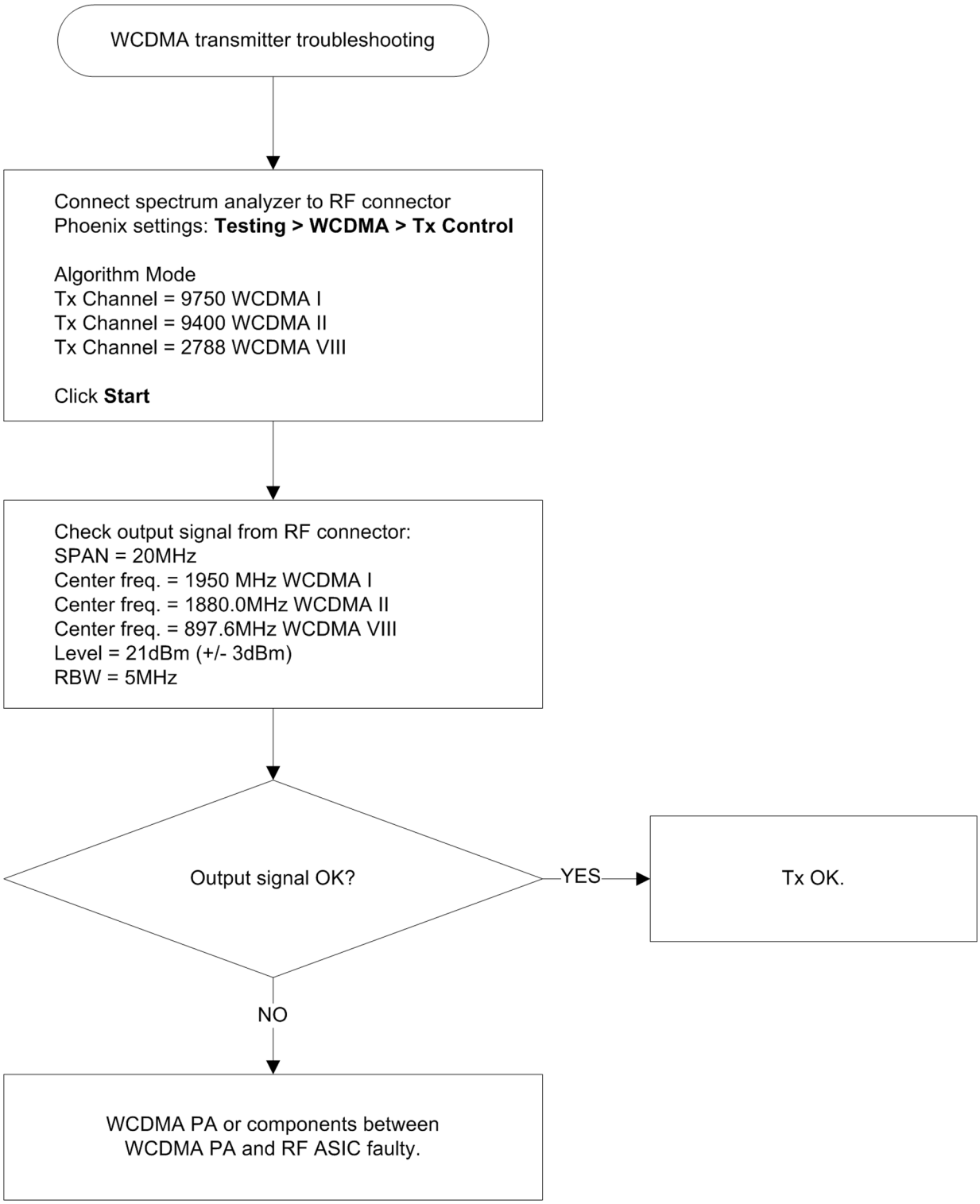

Troubleshooting with RF-shield removed

Introduction

The RF-shield should not be removed in order to replace single components on the RF block. This chapter only assists in locating the faulty component for statistical purposes.

Voltage checking

Steps

1. Set up the main board in the module jig. The phone should be in local mode.
2. Check the following:

TP#	Signal name	Test point	Voltage (all bands)
1	VCTCXO (G7500) supply	C7501	2.5V
2	RFIC Vapaus (N7500) supply from DC/DC converter	C7570	2.8V
3	TXFEM (N7520) supply from DC/DC converter	C7521	1.3V-3.8V (only when transmitting and depends on output power).
4	WCDMA PA (N7540) supply from DC/DC converter	C7528	0.7V-3.1V (only when transmitting and depends on output power). The value will be 3.1V when settings as described in the note below are used.
5	Vbat at WCDMA PA (N7540)	C7512	3.7V (Vbattery)
6	Supply input to DC/DC conv	C7527	3.7V (Vbattery)

Note: When using settings as shown in the following Tx Control window, the result at TP4 should be 3.1V.

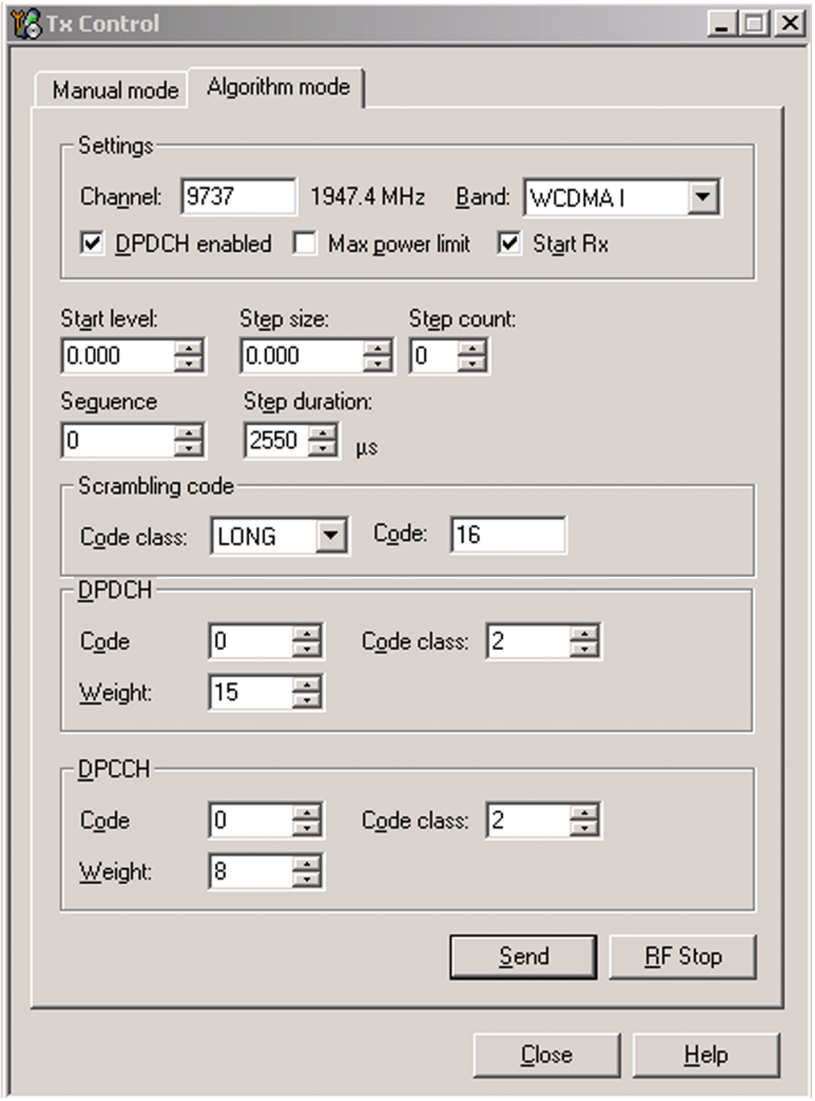

Figure 27 Phoenix WCDMA Tx Control window settings

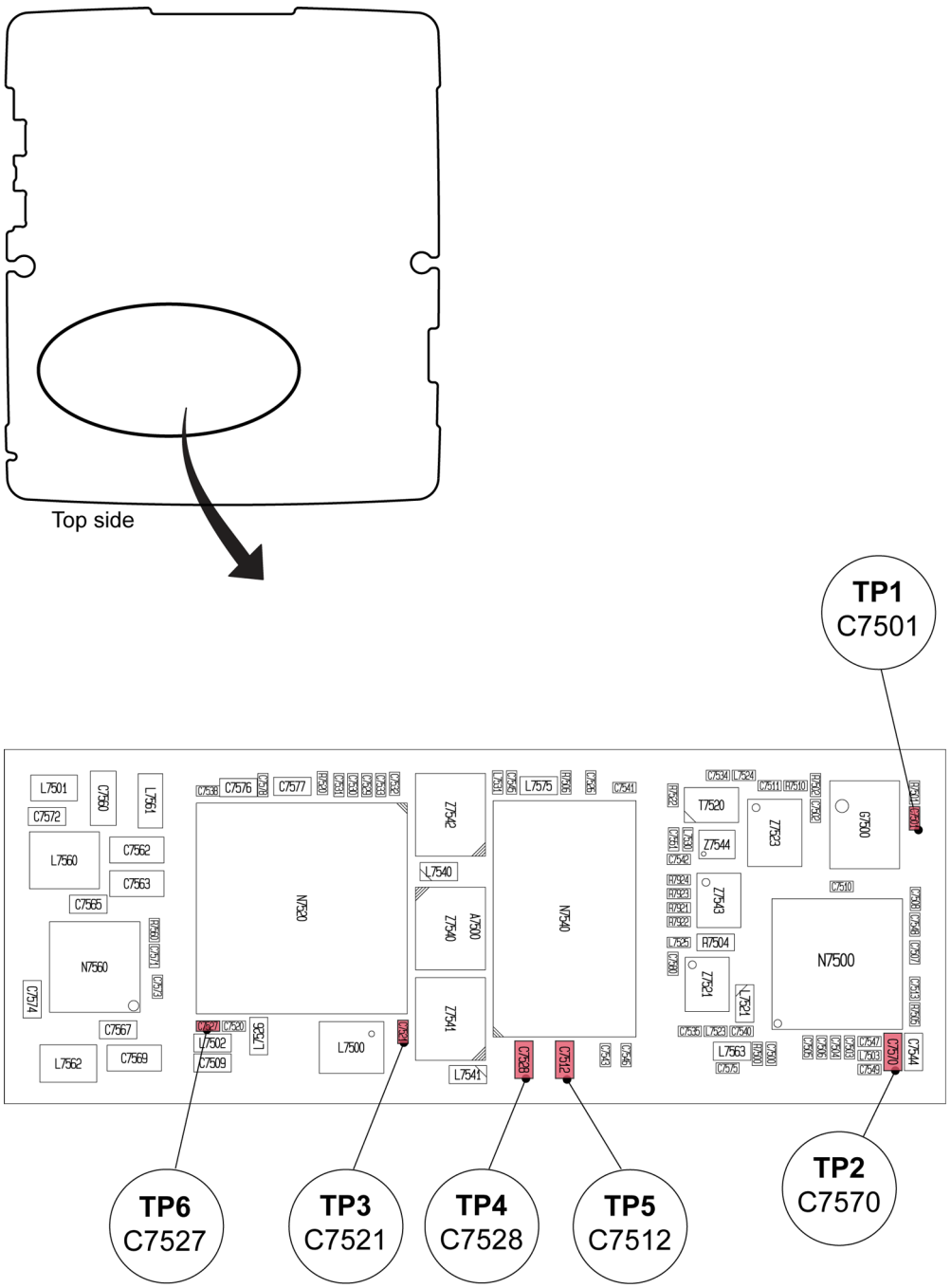

Figure 28 Test points for voltage checking

VCTCXO troubleshooting

Troubleshooting flow

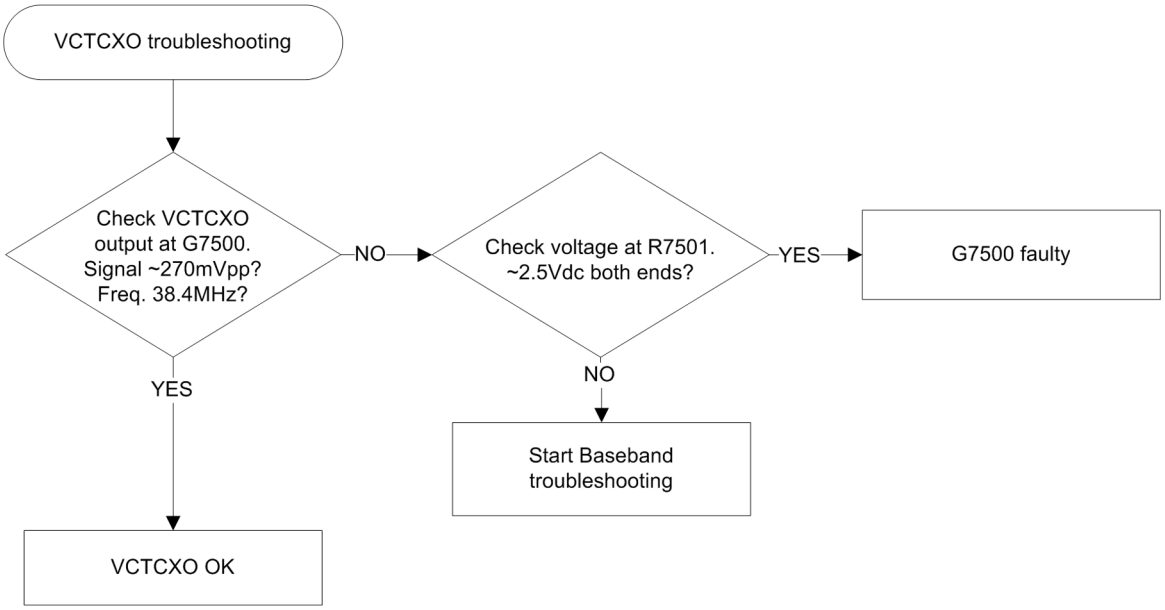

RF component reference

Component reference table

This table shows the components used for the different bands. It can be used as a reference when troubleshooting which components may or may not be faulty.

	GSM850		GSM900		GSM1800		GSM1900		WCDMA1		WCDMA2		WCDMA8	
Reference	RX	TX	RX	TX	RX	TX	RX	TX	RX	TX	RX	TX	RX	TX
G7500	X	X	X	X	X	X	X	X	X	X	X	X	X	X
L7500	X	X	X	X	X	X	X	X	X	X	X	X	X	X
N7500	X	X	X	X	X	X	X	X	X	X	X	X	X	X
N7520	X	X	X	X	X	X	X	X	X	X	X	X	X	X
N7540										X		X		X
N7560	X	X	X	X	X	X	X	X	X	X	X	X	X	X
T7520						X		X						
Z7521	X				X									
Z7523		X		X										
Z7540							X				X	X		
Z7541									X	X				
Z7542			X										X	X
Z7543										X		X		
Z7544														X

X means that the component is used for the band in the current column.

For further reference, see Component reference schematics on the following page.

RF block diagram

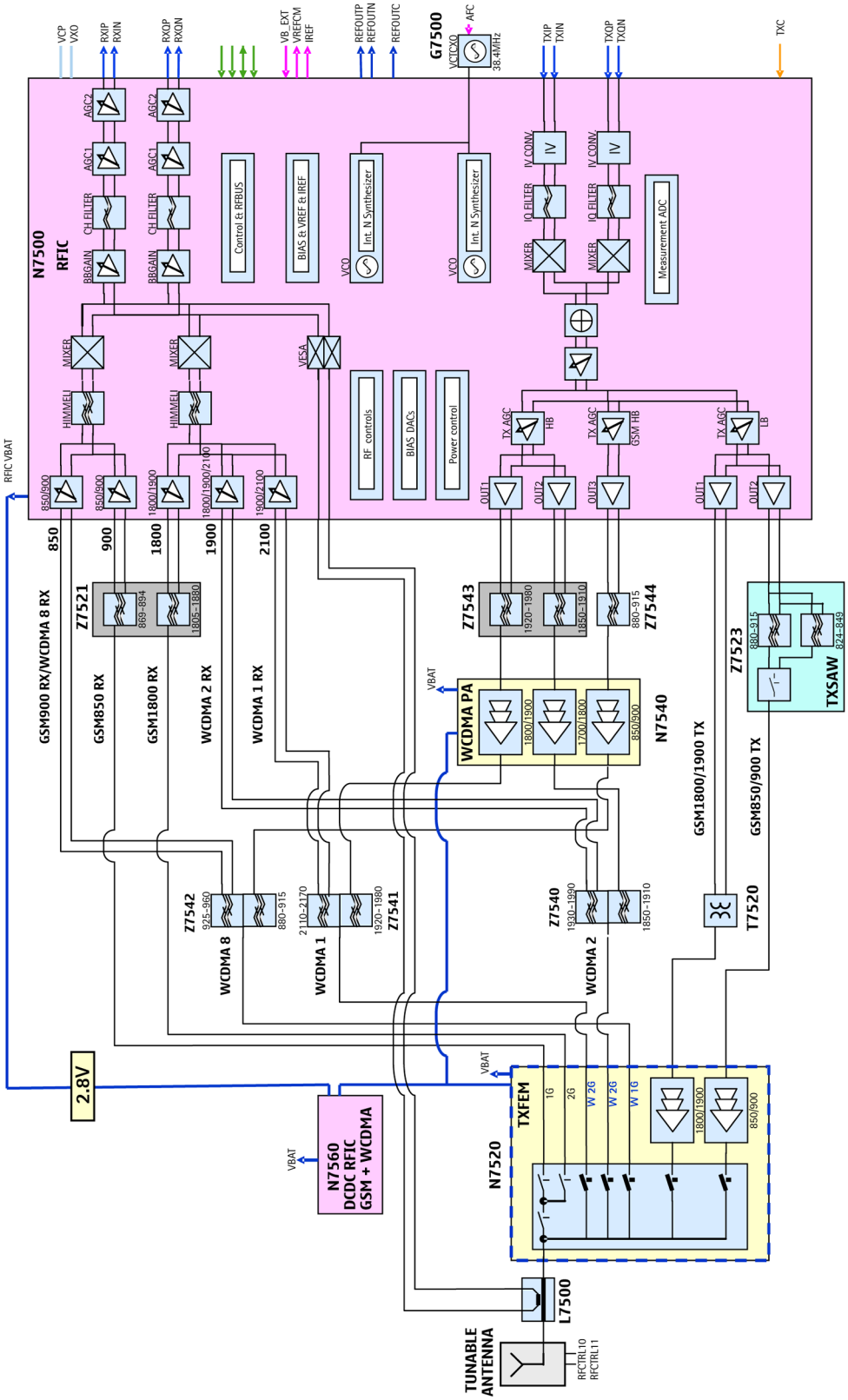

Figure 29 Component reference block diagram

Antenna

Antenna troubleshooting

Antenna contacts, visual check

The phone has two antennas: A cellular antenna and a non-cellular antenna. The cellular antenna has two contact springs (X7401 and X7402). The non-cellular antenna has two contact springs (X6397 and X6399).

Check the shape of the springs and replace if damaged.

(This page left intentionally blank.)

5 — System Module

(This page left intentionally blank.)

Table of Contents

List of Tables

List of Figures

(This page left intentionally blank.)

Introduction

Phone description

RAPU is the main digital baseband ASIC in the phone. It contains functionality for both WCDMA and GSM EDGE. Gazoo (N2200) is main audio and energy management controller for the phone.

Key components

Function	Description	Item ref
Main PWB	3fea	
AV connector		X2001
Baseband ASIC	EM ASIC Gazoo	N2200
RF ASIC	VAPAUS	N7500
Processor	RAPU	D2800
GSM PA	Front end module (FEM), quad band	N7520
WCDMA PA		N7540
Oscillators	VCTCXO	G7500
Balun GSM		T7520
Memory	Combo 2G DDR + 4G M3 (stacked with RAPU)	D3000
Back-up battery	RTC back-up battery 311	G2200
Bluetooth + FM radio	BTHFMRDS2.3M module	N6000
USB	USB tranceiver	D3300
WLAN	WLAN Size4.0b	N6300
Battery	BL-5F	
Battery connector	Tabby blade interface	X2070
MicroSD connector		X3200
RF connector		X7400
SIM connector		X2700
Charging connector		X2000

Key component placement

Top side

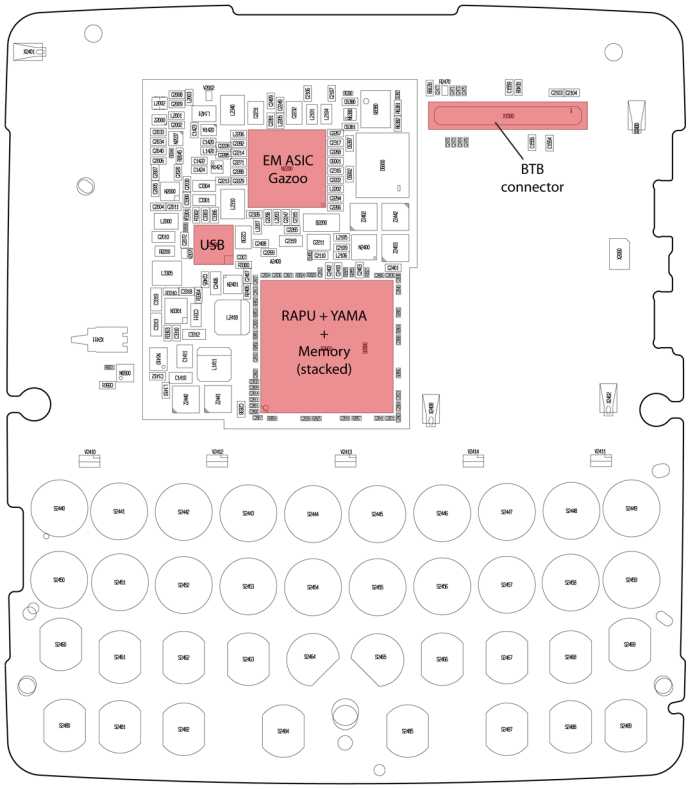

Bottom side

System module block diagram

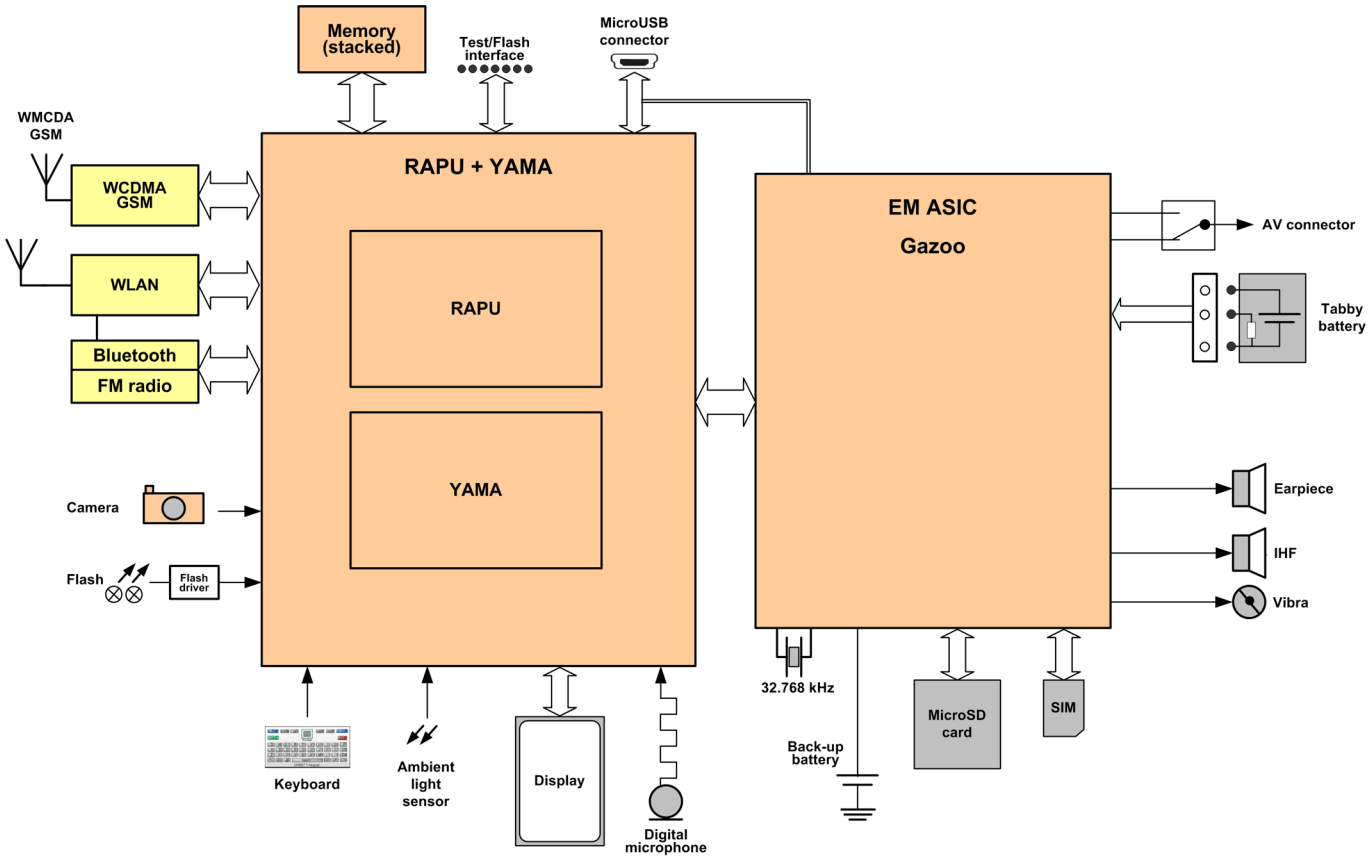

Energy management

Battery and charging

BL-5F battery

The phone is powered by a 3-pole BL-5F 950 mAh battery (Li-Ion). The three poles of the battery are named VBAT, BSI and GND, where the BSI line is used to recognize the battery capacity. This is done by means of an internal battery pull down resistor.

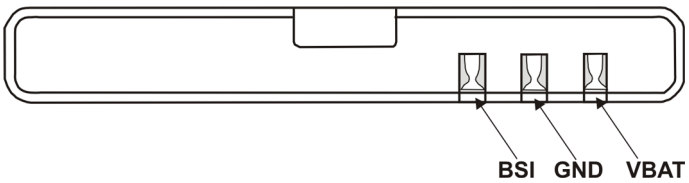

Figure 30 Battery pin order

The battery temperature is estimated by measuring separate battery temperature NTC via the BTEMP line of EM ASIC (N2200). This resistor is located on the main PWB, at a place where the phone temperature is closest to the battery temperature.

Battery connector

The battery connector is a blade connector. It has three blades;

- BSI (Battery size indicator)

- GND (Ground)
- VBAT (Battery voltage)

The BSI line is used to recognize the battery capacity by a battery internal pull down resistor.

Figure 31 Blade battery connector

Charging

This phone is charged through the micro USB interface.

Charging is controlled by EM ASIC (N2200), and external components are needed to protect the baseband module against EMC, reverse polarity and transient frequency deviation.

Charging a dead battery

Charging of a dead battery has to be carried out via an approved NOKIA charger. Charging of a dead battery via a PC is not allowed, since this procedure does not including a current regulator (the battery can be charged with a too high current level).

Normal and extreme voltages

Energy management is mainly carried out in the EM ASIC (N2200). that contains a number of regulators. In addition there are also some external regulators.

In the table below normal and extreme voltages are shown when a BL-5F battery is used.

Table 10 Nominal voltages

Voltage	Voltage [V]	Condition
General Conditions		
Nominal voltage	3.700	
Lower extreme voltage	3.145	
Higher extreme voltage (fast charging)	4.230	
HW Shutdown Voltages		
Vmstr+	2.1 ± 0.1	Off to on
Vmstr-	1.9 ± 0.1	On to off
SW Shutdown Voltages		
Sw shutdown	3.1	In call
Sw shutdown	3.2	In idle
Min Operating Voltage		
Vcoff+	2.9 ± 0.1	Off to on
Vcoff-	2.6 ± 0.1	On to off

Power key and system power-up

When the battery is placed in the phone, the power key circuits are energized. When the power key is pressed, the system boots up (if an adequate battery voltage is present).

Power down can be initiated by pressing the power key again and the system is powered down with the aid of SW. The power key is connected to EM ASIC (N2200) via the PWRONX signal.

Modes of operation

Mode	Description
NO_SUPPLY	(Dead) mode means that the main battery is not present or its voltage is too low (below EM ASIC master reset threshold) and that the back-up battery voltage is too low.
BACK_UP	The main battery is not present or its voltage is too low but back-up battery voltage is adequate and the 32 kHz oscillator is running (RTC is on).
PWR_OFF	In this mode (warm), the main battery is present and its voltage is over EM ASIC master reset threshold. All regulators are disabled, PurX is on low state, the RTC is on and the oscillator is on. PWR_OFF (cold) mode is almost the same as PWR_OFF (warm), but the RTC and the oscillator are off.
RESET	RESET mode is a synonym for start-up sequence. RESET mode uses 32kHz clock to count the REST mode delay (typically 16ms).
SLEEP	SLEEP mode is entered only from PWR_ON mode with the aid of SW when the system's activity is low.
FLASHING	FLASHING mode is for SW downloading.

Clocking scheme

In BB5.44, two main clocks are provided to the system: 38.4MHz RF clock produced by VCTCXO in the RF section and 32.768kHz sleep clock produced by EM ASIC N2200 with an external crystal.

32 k Sleep Clock is always powered on after startup. Sleep clock is used by RAPU for low-power operation.

SMPS Clk is 2.4MHz clock line from RAPU to EM ASIC N2200. In deep sleep mode, when VCTCXO is off, this signal is set to '0'-state.

CLK600. The clock source is an internal RC oscillator in EM ASIC N2200 (during the power-up sequence) or RAPU SMPS Clk.

Bluetooth has a separate 38.4MHz TCXO clock oscillator.

Power distibution

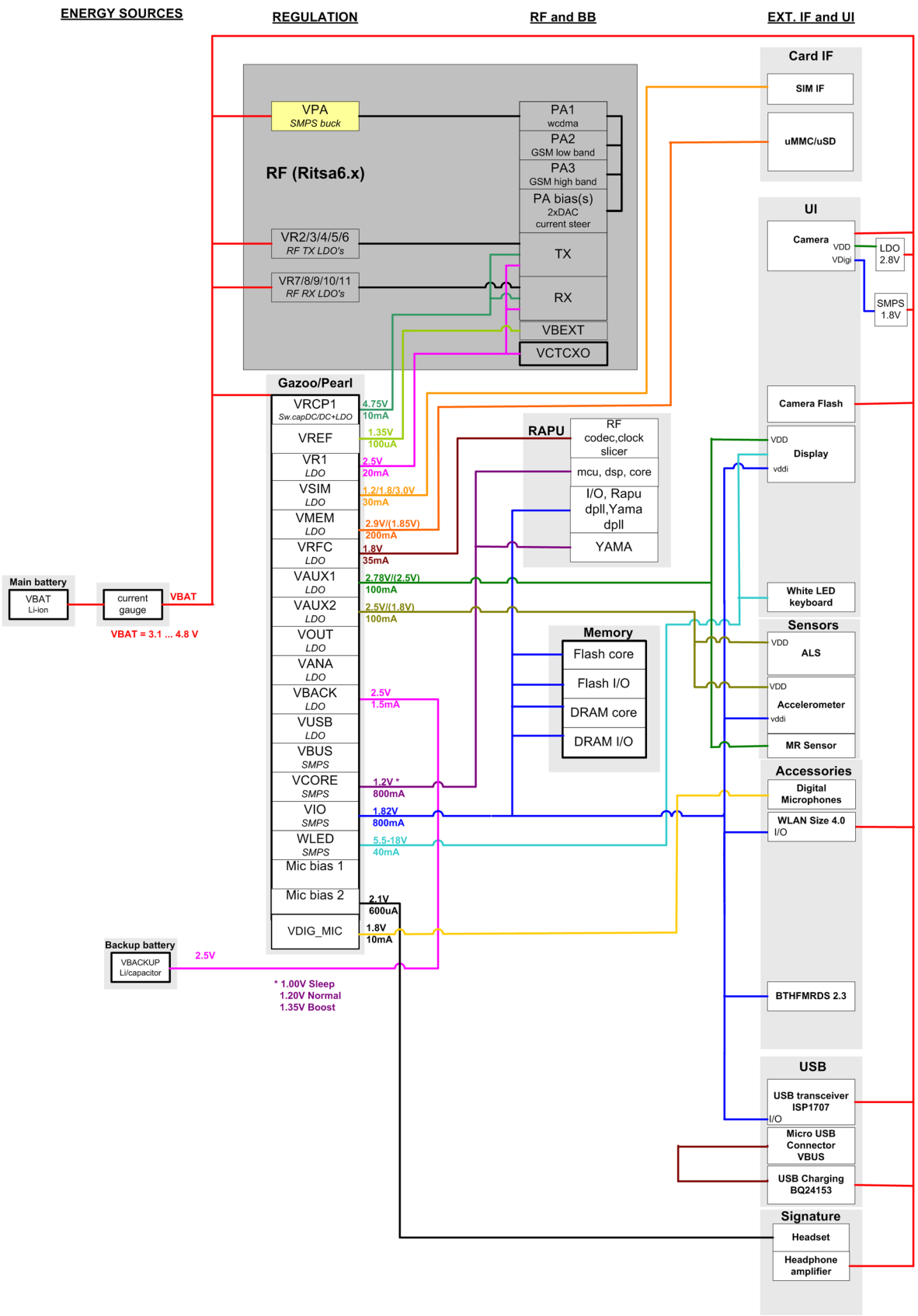

Figure 32 Power distribution diagram

SIM interface

The phone has a SIM (Subscriber Identification Module) interface including a SIM connector. The connector is only accessible when the battery is removed.

The SIM interface consists of an internal interface between RAPU and EM ASIC (N2200), and an external interface between EM ASIC and SIM contacts.

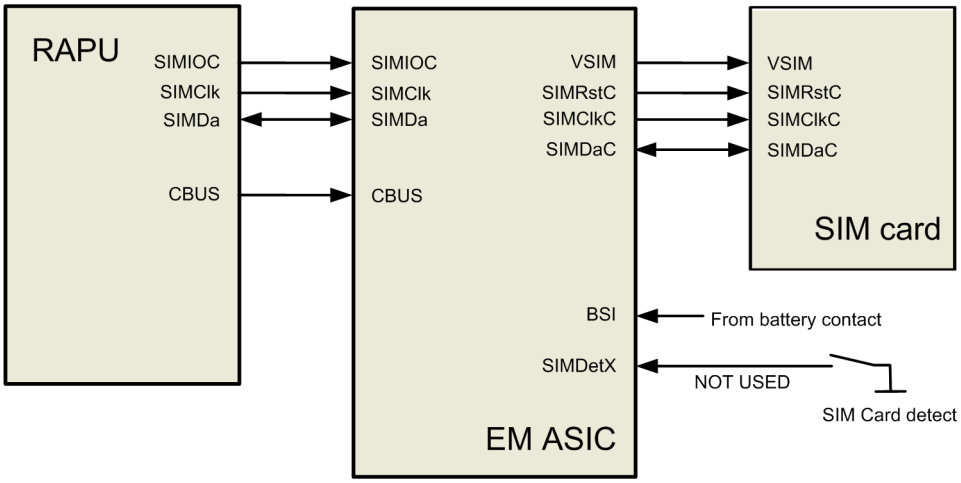

Figure 33 SIM interface

The EM ASIC handles the detection of the SIM card. The detection method is based on the BSI line. Because of the location of the SIM connector, removing the battery causes a quick power down of the SIM interface.

The SIM interface supports both 1.8V and 3.0V SIM cards. The SIM interface voltage is first 1.8 V when the SIM card is inserted, and if the card does not response to the ATR (Answer to Request), a 3V interface voltage is used.

MicroSD card interface

The microSD card interface has one internal interface between RAPU and EM ASIC and one external interface between EM ASIC and the microSD card. The microSD card connector is mounted on a separate PWB, the Micro PWB.

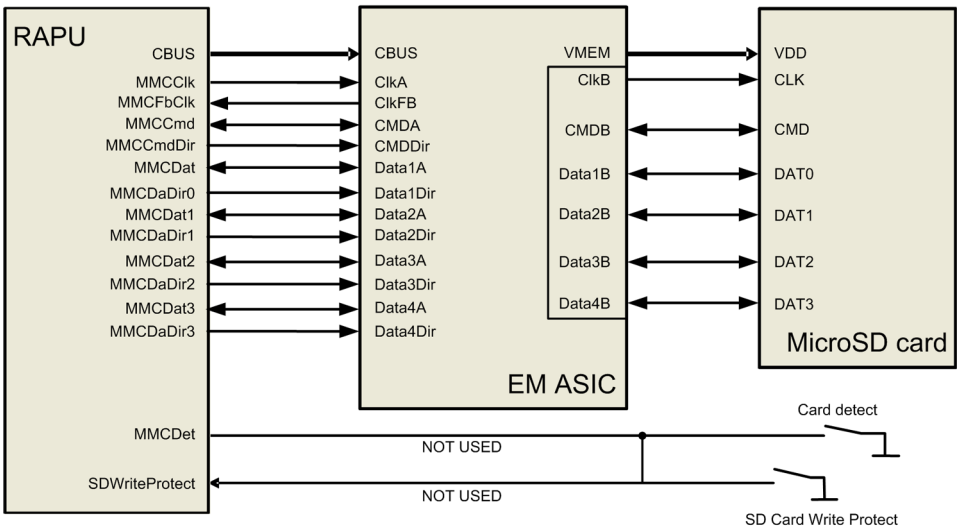

Figure 34 MicroSD card interface

USB

USB interface

The phone has an interface for USB (Universal Serial Bus). USB is a differential serial bus that provides a wired connectivity between the phone and, for example a PC.

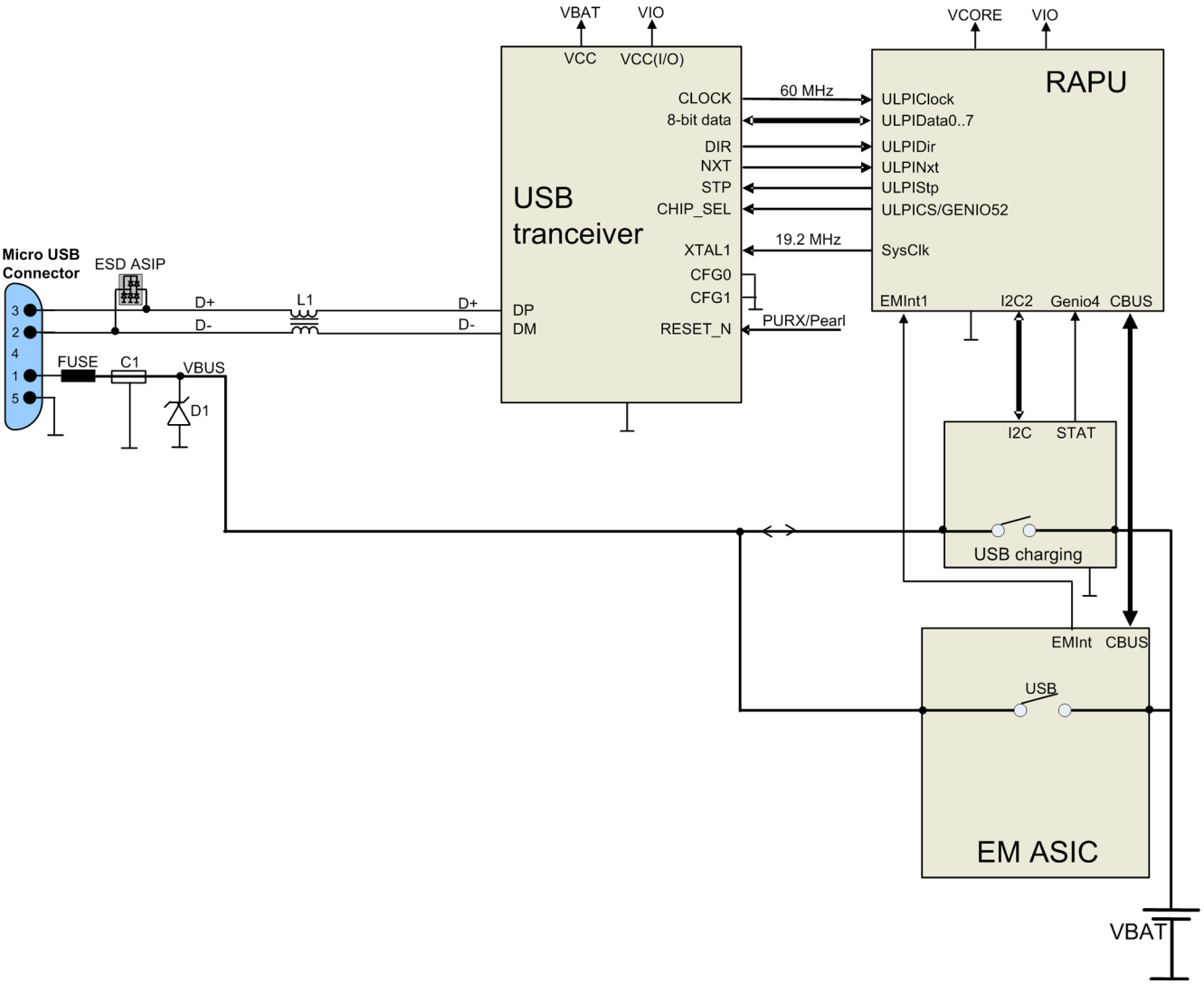

Figure 35 USB interface

The phone supports USB 2.0 with High-Speed (480 Mbps).

Hot swap is supported, which means that USB devices may be plugged in and out at any time.

MicroUSB connector

This phone is provided with a specific connector for microUSB.

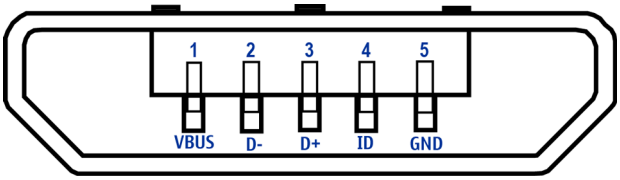

Figure 36 MicroUSB connector

User interface

Display interface

The following block diagram illustrates the display interface. Command signals and transmitted data to the display module comes directly from RAPU.

Display backlight is provided by an external LED driver.

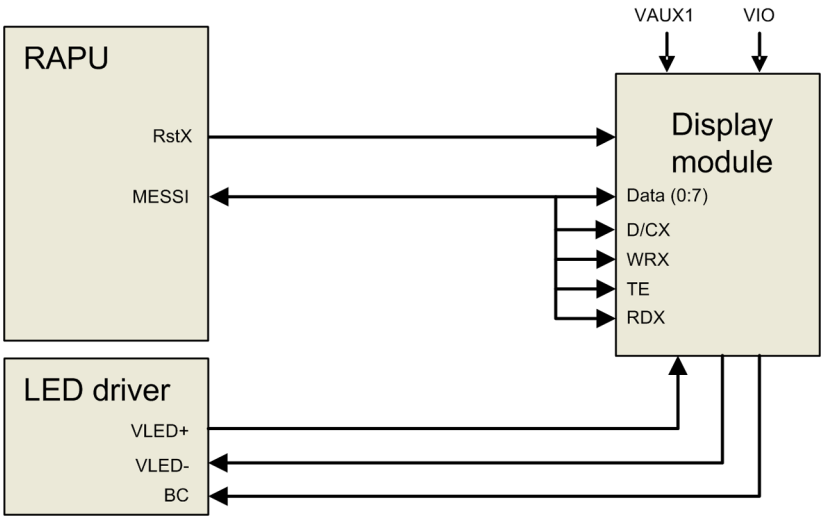

Figure 37 Display interface

Keyboard interface

Table 11 Key signal matrix

KEY_COL KEY_ROW	<0>	<1>	<2>	<3>	<4>	<5>	<6>	<7>	<8>
<0>	FN	Shift	Chr	Space	N	Vol +	Space	&	
<1>	Z	X	C	V	B	Vol -	M	, ;	
<2>	A	S	D	F	G	H	J	K	
<3>	Q	W	E	R	T	Y	U	I	
<4>	? !	CTRL	Left	Select	Right	Down	S60-L		
<5>	. :	Return	Soft-Left	Up	Soft-Right	S60-R	Send		
<6>	L	BS							
<7>	O	P							
<8>									

The following block diagram shows the keyboard interface.

The keyboard interface is implemented with RAPU's GENIOs.

The LEDs at the keyboard are controlled by a LED driver. The driver is controlled by a PWM signal from EM ASIC Gazoo.

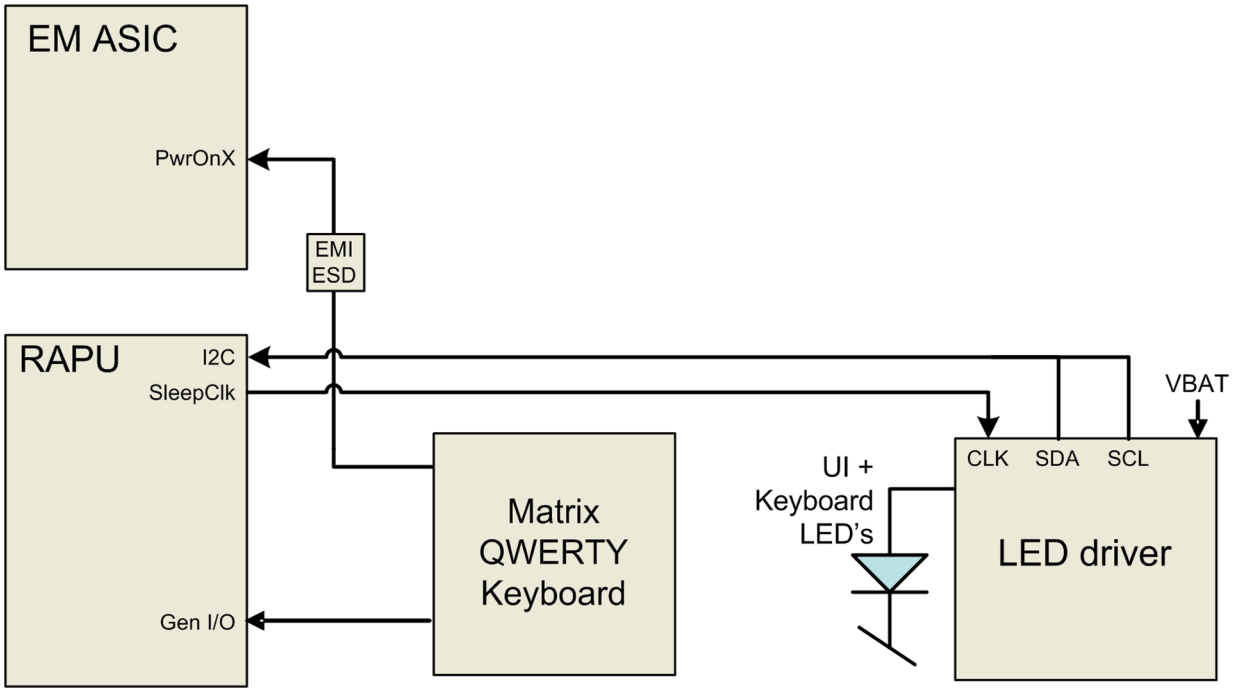

Figure 38 Keyboard interface

Ambient light sensor (ALS) interface

Ambient light sensor information is used to control keyboard and display brightness.

- Keyboard backlight is turned OFF, when it is not needed.
- Display brightness is dimmed, when environment lighting is dark.

The ambient light sensor is calibrated in production and can be re-tuned in service points, though not recommended unless calibration coefficient is lost for some reason

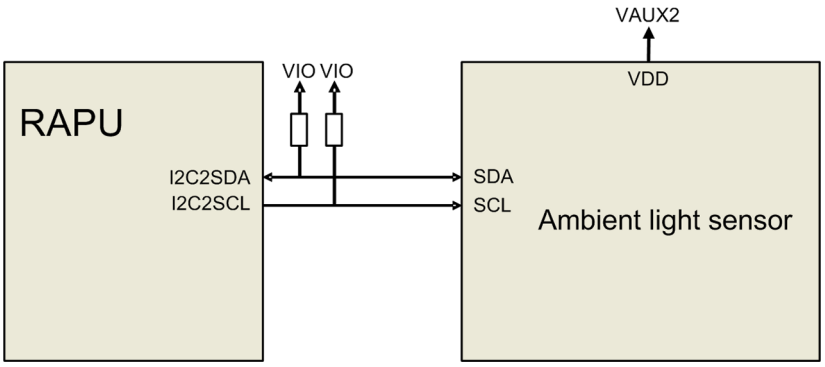

Figure 39 Ambient light sensor (ALS) interface

Audio interface

The following block diagram illustrates the audio interface of the phone:

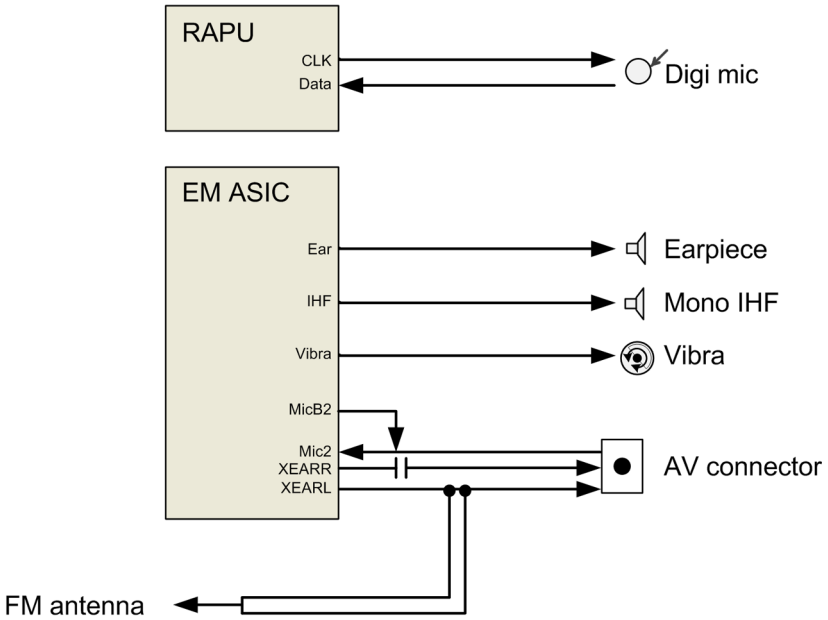

Figure 40 Audio interface

The digital microphone is connected directly to RAPU.

The earpiece is driven directly by a built-in amplifier included in EM ASIC.

The IHF speaker is driven directly by a built-in stereo amplifier included in EM ASIC.

The vibra is driven directly by a built-in amplifier included in EM ASIC.

AV connector

The AV connector handles audio signals output and input. It has audio left and right signals separately (pins 4 and 5) and microphone signals wired to pin 3.

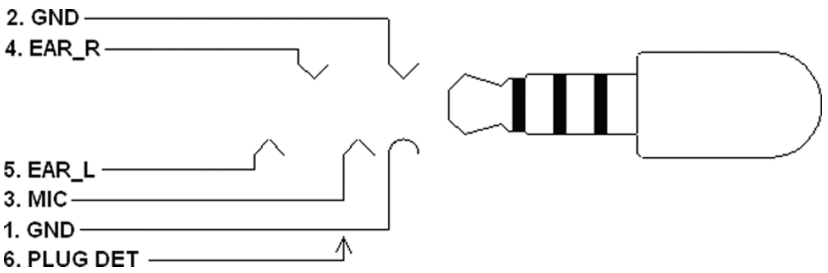

Figure 41 AV connector

The plug detection signal handles the AV connector plug detection with HeadDet signal from EM ASIC.

Bluetooth interface

Bluetooth provides a fully digital link for communication between a master unit (the phone) and one or more slave units (e.g. a wireless headset). Data and control interface for a low power RF module is provided by the BTHFM module.

Bluetooth is physically integrated with FM radio in the BTHFM module ASIC, but from a functional point of view they have nothing in common

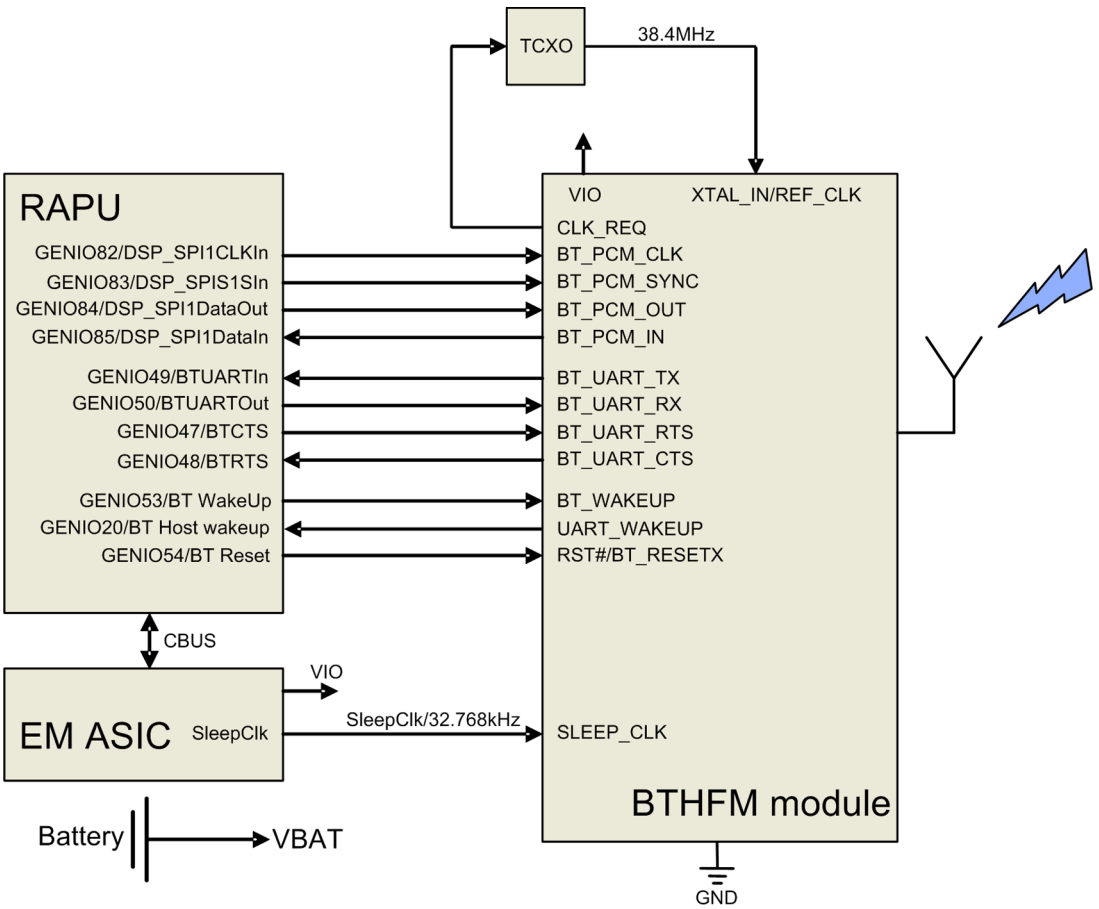

Figure 42 Bluetooth interface

The BTHFM module is powered by the regulated voltage VIO. For audio applications the Bluetooth has a PCM data bus. In addition an UART (universal asynchronous receiver/transmitter) is used for data communication and controls.

FM radio interface

The FM radio system is controlled by RAPU via the I2C bus. EM ASIC delivers the needed voltages and the clock reference (32.768kHz SleepClk). EM ASIC also processes the analog audio.

The FM receiver fully supports reception over US/European (87.5MHz to 108MHz) and Japanese (76MHz to 90MHz) FM band. The FM receiver comprises an RF receiver with fully integrated VCO, a stereo FM demodulator and a RDS demodulator.

A headset accessory is used as an external antenna. The headset is connected to the AV connector.

FM radio is physically integrated with Bluetooth in the BTHFM module ASIC, but from a functional point of view FM radio and Bluetooth have nothing in common.

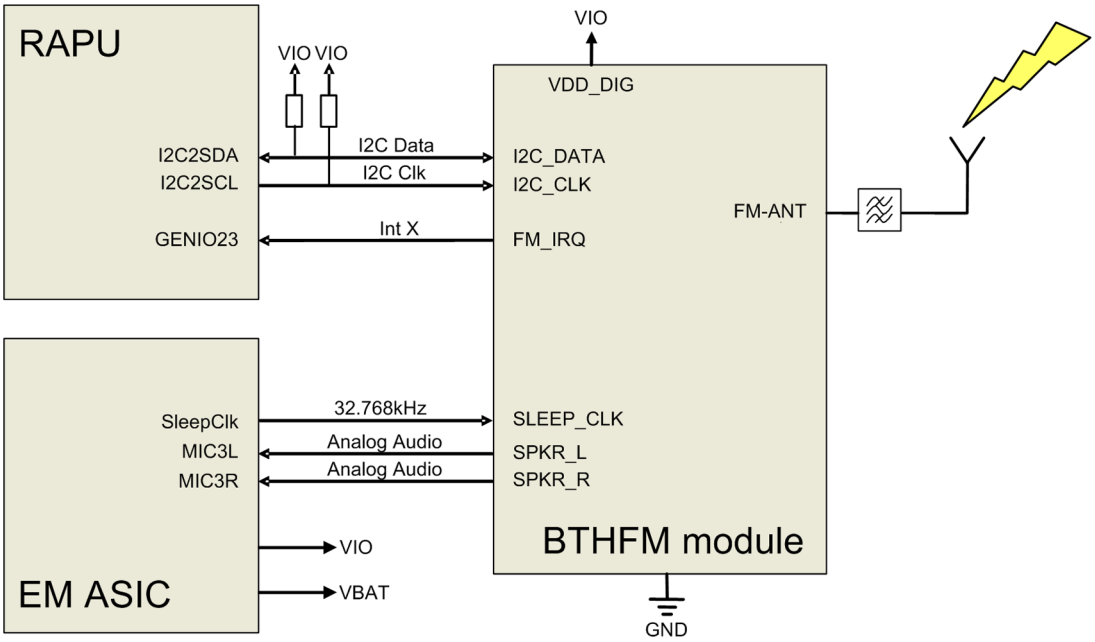

Figure 43 FM radio interface

RF description

Receiver (RX)

An analogue signal is received by the phone's antenna. The signal is converted to a digital signal and is then transferred further to the baseband (e.g. to the earpiece).

The receiver functions are implemented in the RF ASIC.

Signals with different frequencies take different paths, therefore being handled by different components. The principle of GSM and WCDMA is the same.

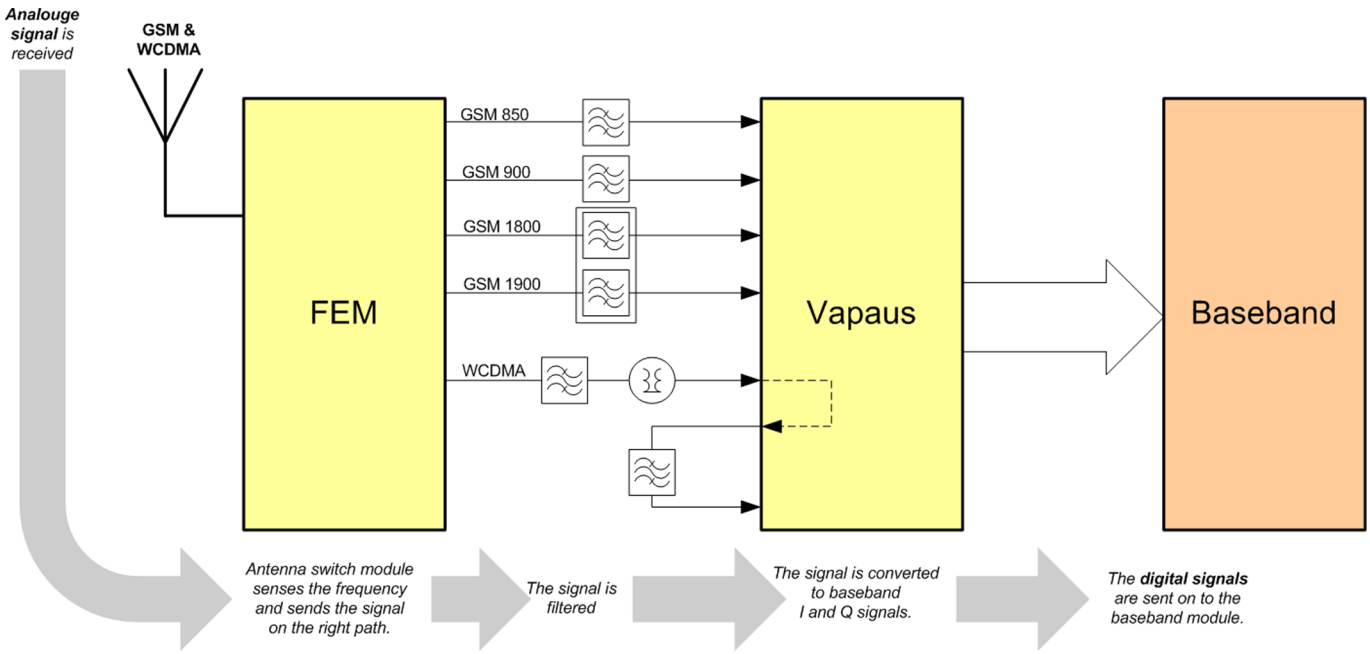

Transmitter (TX)

The digital baseband signal (e.g. from the microphone) is converted to an analogue signal, which is then amplified and transmitted from the antenna. The frequency of this signal can be tuned to match the bandwith of the system in use (e.g. GSM900).

The transmitter functions are implemented in the RF ASIC.

Even though the GSM and WCDMA signals are sent via different components, the principle of the transmission is the same.

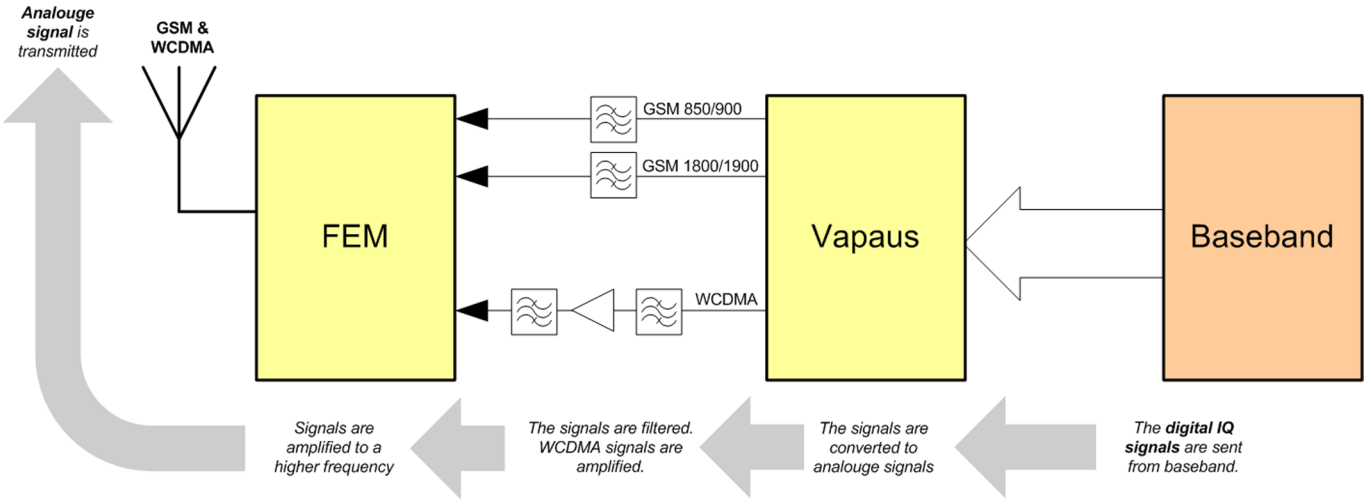

Glossary

(This page left intentionally blank.)

A/D-converter	Analogue-to-digital converter
ACI	Accessory Control Interface
ADC	Analogue-to-digital converter
ADSP	Application DPS (expected to run high level tasks)
AGC	Automatic gain control (maintains volume)
ALS	Ambient light sensor
AMSL	After Market Service Leader
ARM	Advanced RISC Machines
ARPU	Average revenue per user (per month or per year)
ASIC	Application Specific Integrated Circuit
ASIP	Application Specific Interface Protector
B2B	Board to board, connector between PWB and UI board
BA	Board Assembly
BB	Baseband
BC02	Bluetooth module made by CSR
BIQUAD	Bi-quadratic (type of filter function)
BSI	Battery Size Indicator
BT	Bluetooth
CBus	MCU controlled serial bus connected to UPP_WD2, UEME and Zocus
CCP	Compact Camera Port
CDMA	Code division multiple access
CDSP	Cellular DSP (expected to run at low levels)
CLDC	Connected limited device configuration
CMOS	Complimentary metal-oxide semiconductor circuit (low power consumption)
COF	Chip on Foil
COG	Chip on Glass
CPU	Central Processing Unit
CSD	Circuit-switched data
CSR	Cambridge silicon radio
CSTN	Colour Super Twisted Nematic
CTSI	Clock Timing Sleep and interrupt block of Tiku
CW	Continuous wave
D/A-converter	Digital-to-analogue converter
DAC	Digital-to-analogue converter
DBI	Digital Battery Interface
DBus	DSP controlled serial bus connected between UPP_WD2 and Helgo

DCT-4	Digital Core Technology
DMA	Direct memory access
DP	Data Package
DPLL	Digital Phase Locked Loop
DSP	Digital Signal Processor
DTM	Dual Transfer Mode
DtoS	Differential to Single ended
EDGE	Enhanced data rates for global/GSM evolution
EGSM	Extended GSM
EM	Energy management
EMC	Electromagnetic compatibility
EMI	Electromagnetic interference
ESD	Electrostatic discharge
FCI	Functional cover interface
FM	Frequency Modulation
FPS	Flash Programming Tool
FR	Full rate
FSTN	Film compensated super twisted nematic
GMSK	Gaussian Minimum Shift Keying
GND	Ground, conductive mass
GPIB	General-purpose interface bus
GPRS	General Packet Radio Service
GSM	Group Special Mobile/Global System for Mobile communication
HSDPA	High-speed downlink packet access
HF	Hands free
HFCM	Handsfree Common
HS	Handset
HSCSD	High speed circuit switched data (data transmission connection faster than GSM)
HW	Hardware
I/O	Input/Output
IBAT	Battery current
IC	Integrated circuit
ICHAR	Charger current
IF	Interface
IHF	Integrated hands free
IMEI	International Mobile Equipment Identity

IR	Infrared
IrDA	Infrared Data Association
ISA	Intelligent software architecture
JPEG/JPG	Joint Photographic Experts Group
LCD	Liquid Crystal Display
LDO	Low Drop Out
LED	Light-emitting diode
LPRF	Low Power Radio Frequency
MCU	Micro Controller Unit (microprocessor)
MCU	Multiport control unit
MIC, mic	Microphone
MIDP	Mobile Information Device Profile
MIN	Mobile identification number
MIPS	Million instructions per second
MMC	Multimedia card
MMS	Multimedia messaging service
MP3	Compressed audio file format developed by Moving Picture Experts Group
MTP	Multipoint-to-point connection
NFC	Near field communication
NTC	Negative temperature coefficient, temperature sensitive resistor used as a temperature sensor
OMA	Object management architecture
OMAP	Operations, maintenance, and administration part
Opamp	Operational Amplifier
PA	Power amplifier
PCM	Pulse Code Modulation
PDA	Pocket Data Application
PDA	Personal digital assistant
PDRAM	Program/Data RAM (on chip in Tiku)
Phoenix	Software tool of DCT4.x and BB5
PIM	Personal Information Management
PLL	Phase locked loop
PM	(Phone) Permanent memory
PUP	General Purpose IO (PIO), USARTS and Pulse Width Modulators
PURX	Power-up reset
PWB	Printed Wiring Board

PWM	Pulse width modulation
RC-filter	Resistance-Capacitance filter
RDS	Radio Data Service
RF	Radio Frequency
RF PopPort ™	Reduced function PopPort ™ interface
RFBUS	Serial control Bus For RF
RSK	Right Soft Key
RS-MMC	Reduced size Multimedia Card
RSS	Web content Syndication Format
RSSI	Receiving signal strength indicator
RST	Reset Switch
RTC	Real Time Clock (provides date and time)
RX	Radio Receiver
SARAM	Single Access RAM
SAW filter	Surface Acoustic Wave filter
SDRAM	Synchronous Dynamic Random Access Memory
SID	Security ID
SIM	Subscriber Identity Module
SMPS	Switched Mode Power Supply
SNR	Signal-to-noise ratio
SPR	Standard Product requirements
SRAM	Static random access memory
STI	Serial Trace Interface
SW	Software
SWIM	Subscriber/Wallet Identification Module
TCP/IP	Transmission control protocol/Internet protocol
TCXO	Temperature controlled Oscillator
Tiku	Finnish for Chip, Successor of the UPP
TX	Radio Transmitter
UART	Universal asynchronous receiver/transmitter
UEME	Universal Energy Management chip (Enhanced version)
UEMEK	See UEME
UI	User Interface
UPnP	Universal Plug and Play
UPP	Universal Phone Processor
UPP_WD2	Communicator version of DCT4 system ASIC

USB	Universal Serial Bus
VBAT	Battery voltage
VCHAR	Charger voltage
VCO	Voltage controlled oscillator
VCTCXO	Voltage Controlled Temperature Compensated Crystal Oscillator
VCXO	Voltage Controlled Crystal Oscillator
VF	View Finder
Vp-p	Peak-to-peak voltage
VSIM	SIM voltage
WAP	Wireless application protocol
WCDMA	Wideband code division multiple access
WD	Watchdog
WLAN	Wireless local area network
XHTML	Extensible hypertext markup language
Zocus	Current sensor (used to monitor the current flow to and from the battery)

(This page left intentionally blank.)